Installation instructions

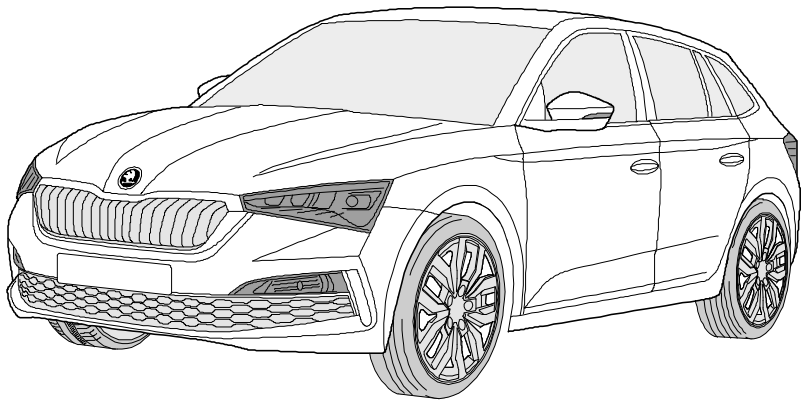

750071

SKODA Scala 05/19 >>

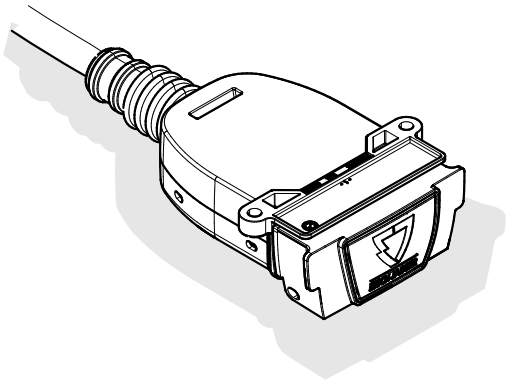

Jaeger FLEX 2in1

Reference:

The following information must be reviewed before beginning the assembly:

The installation instructions are to be thoroughly read.
The installation should be carried out by qualified personnel with the relevant technical knowledge.
The vehicle manufacturers' current technical notices and information on retrofitting must be followed.
The removal and replacement instructions found in the current repair manuals must be followed.
It must be ensured that the vehicle is technically suitable for the installation of a trailer hitch.

OVERVIEW

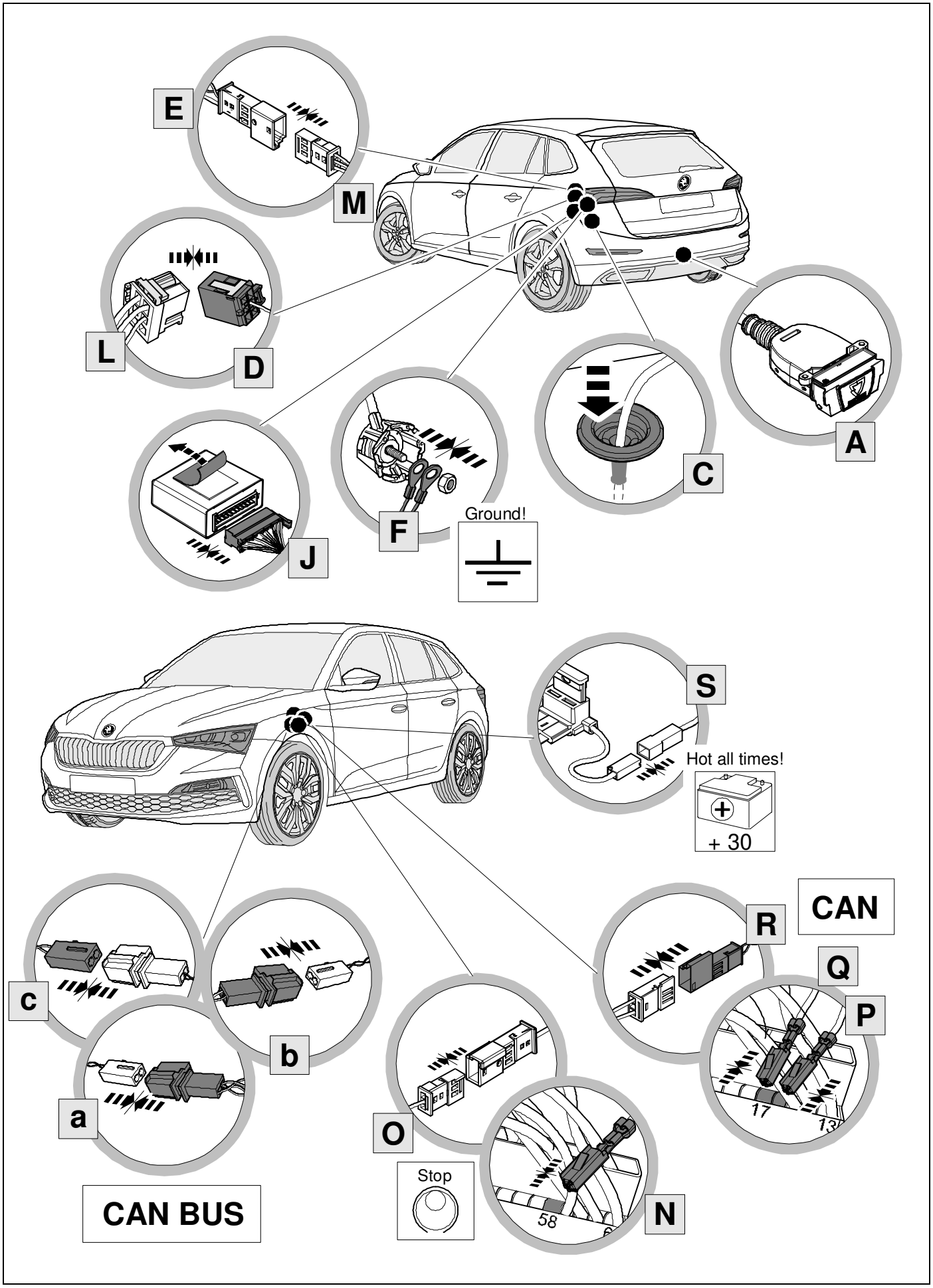

KIT

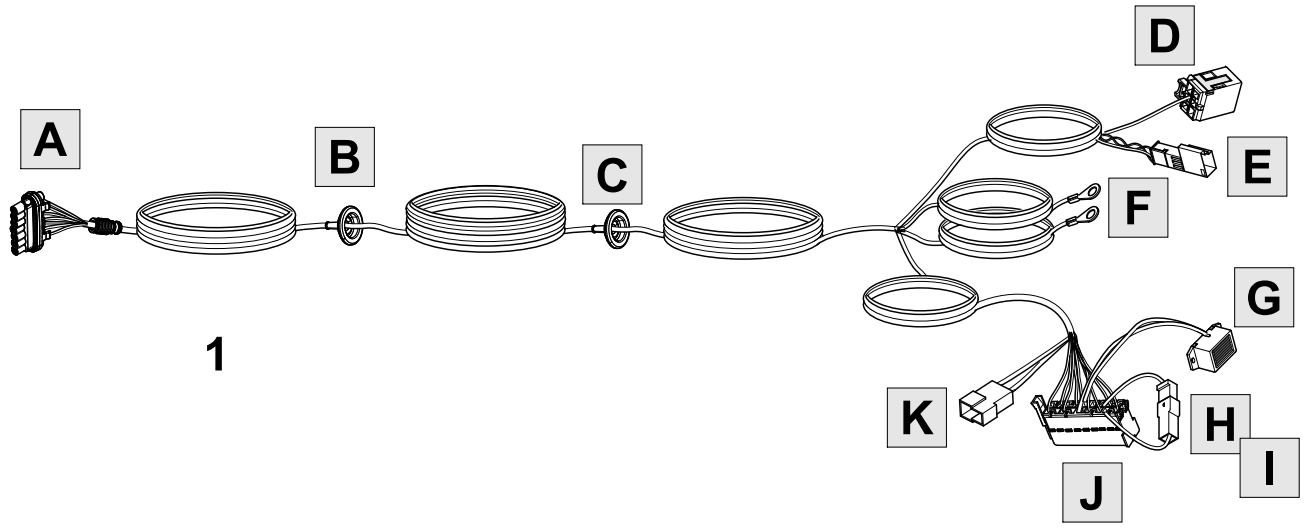
A
B
C
D
E
F
G
H
I
J
K
1

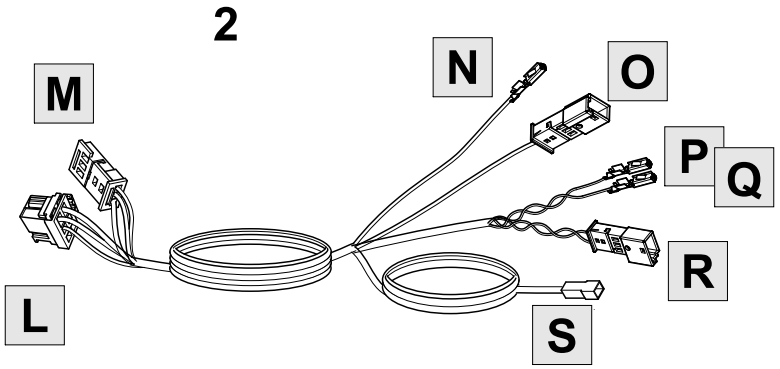
2
L
M
N
O
P
Q
R
S

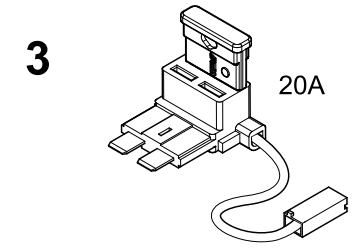
3
20A

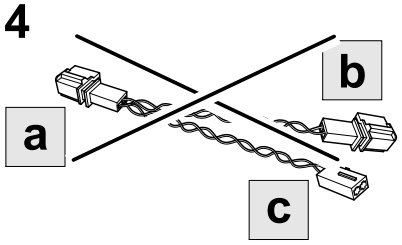
4
a
b
c

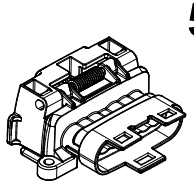
5

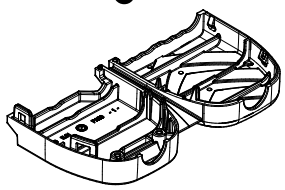
6

7

8
2x

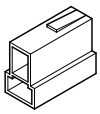
9

10

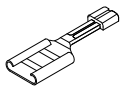
11

12
Service
2x

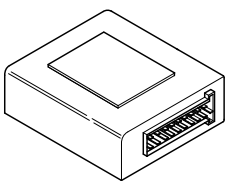
13

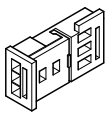
14
bk

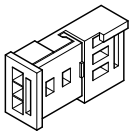
15
wh

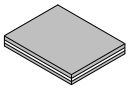
16

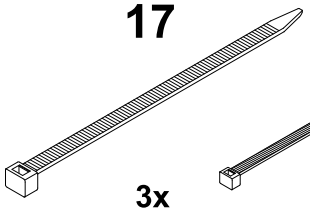
17
3x

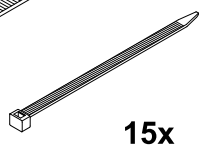
18
15x

19
2x

20
2x

TOOLS

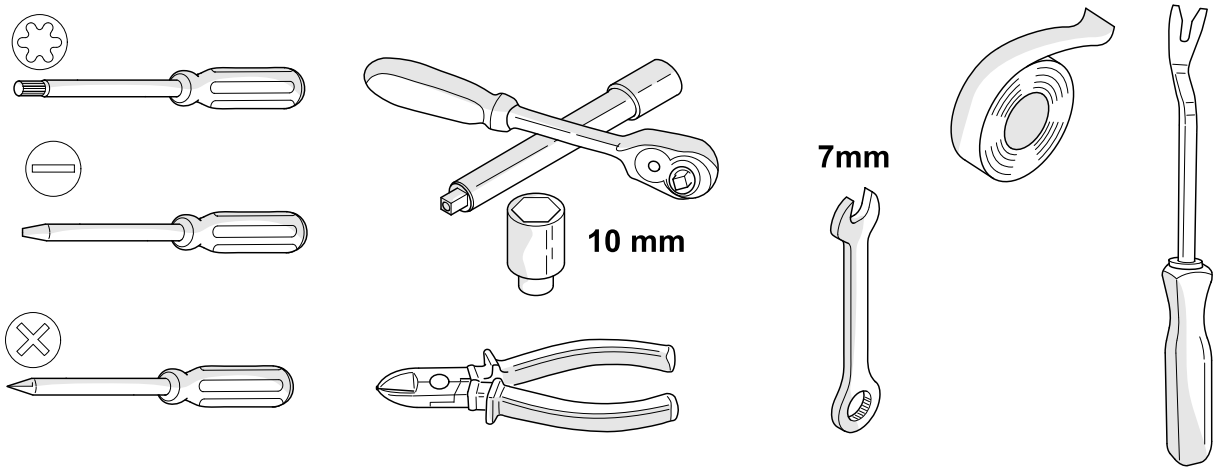

1

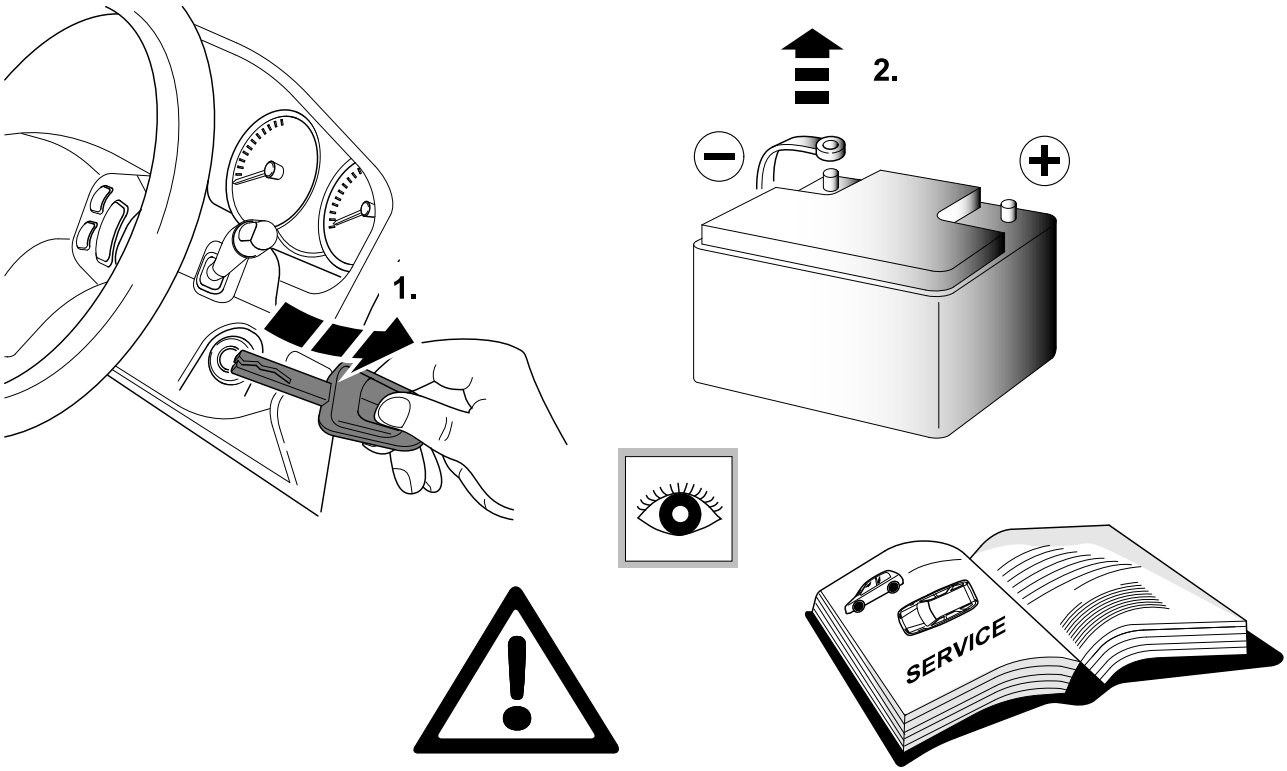

2 REMOVE

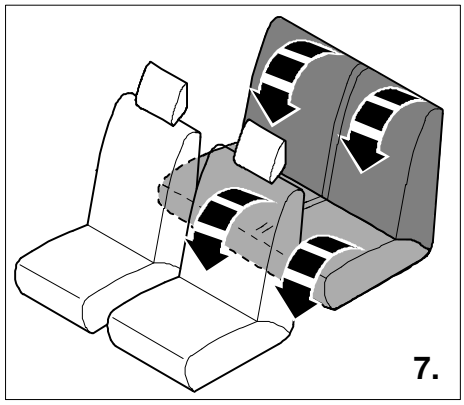

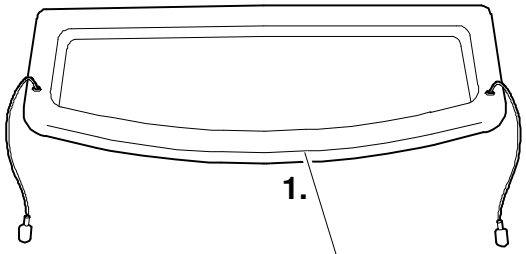

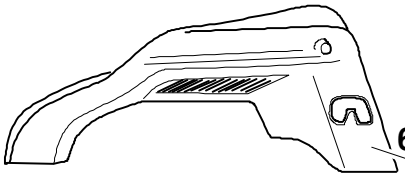

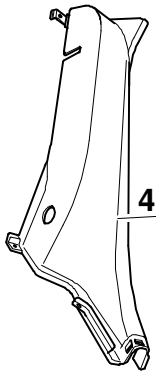

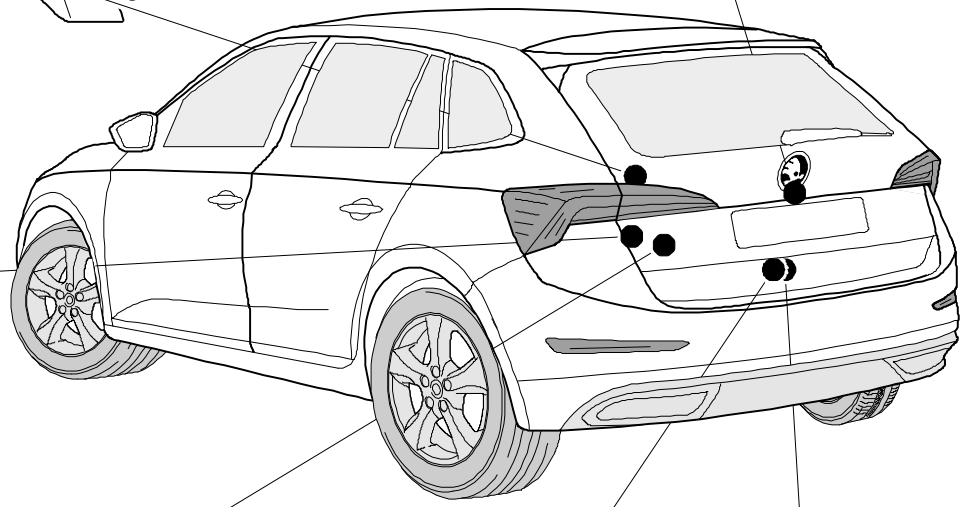

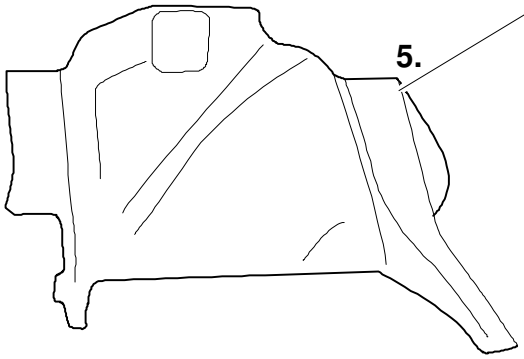

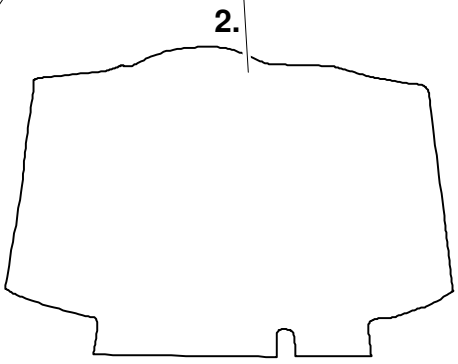

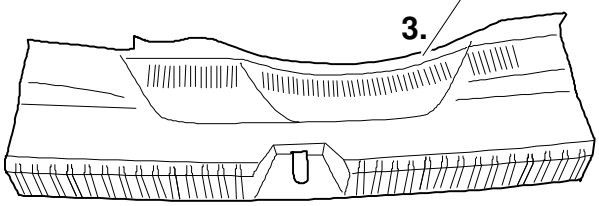

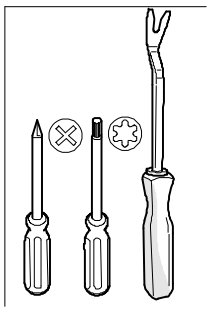

3

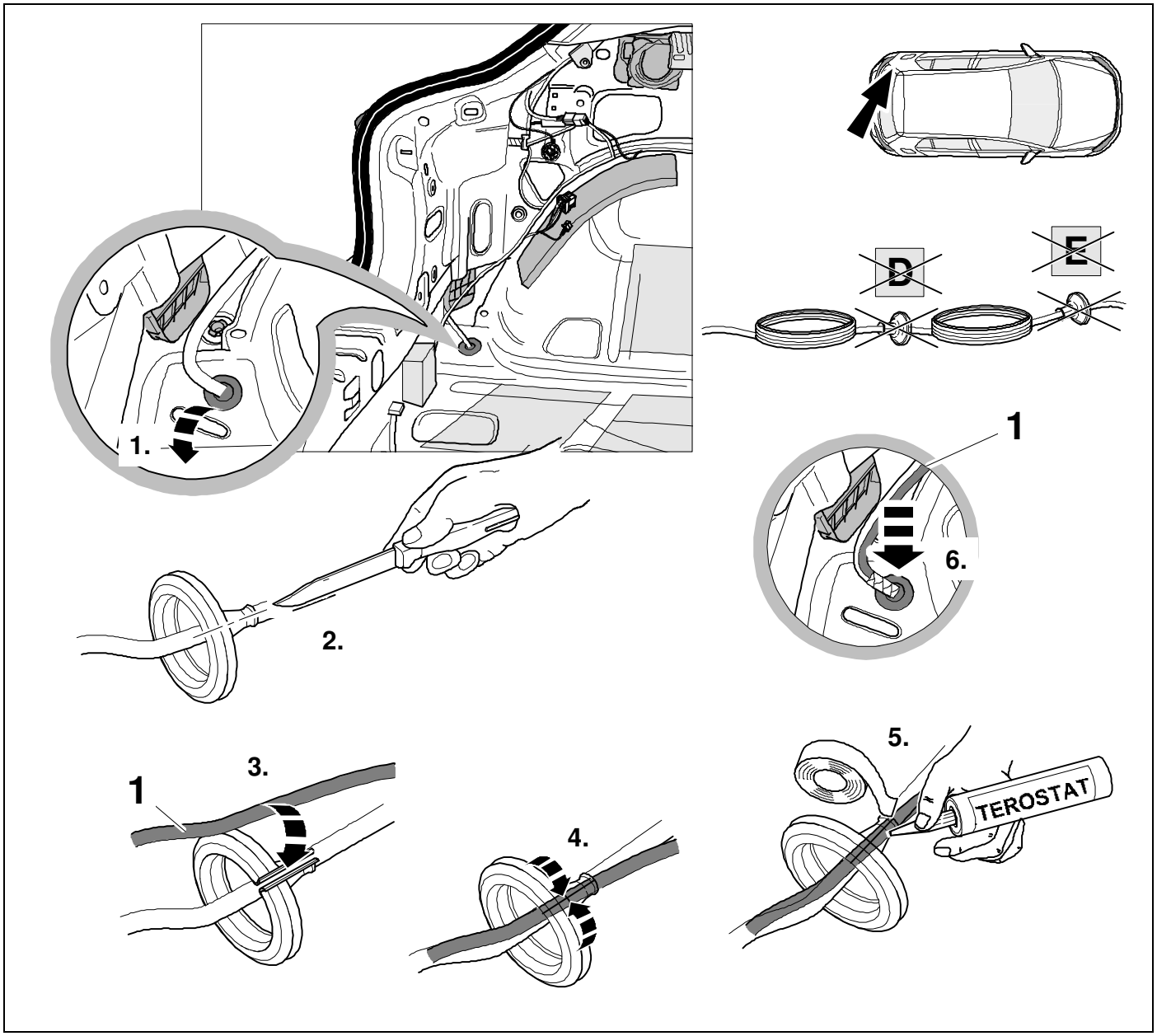

4

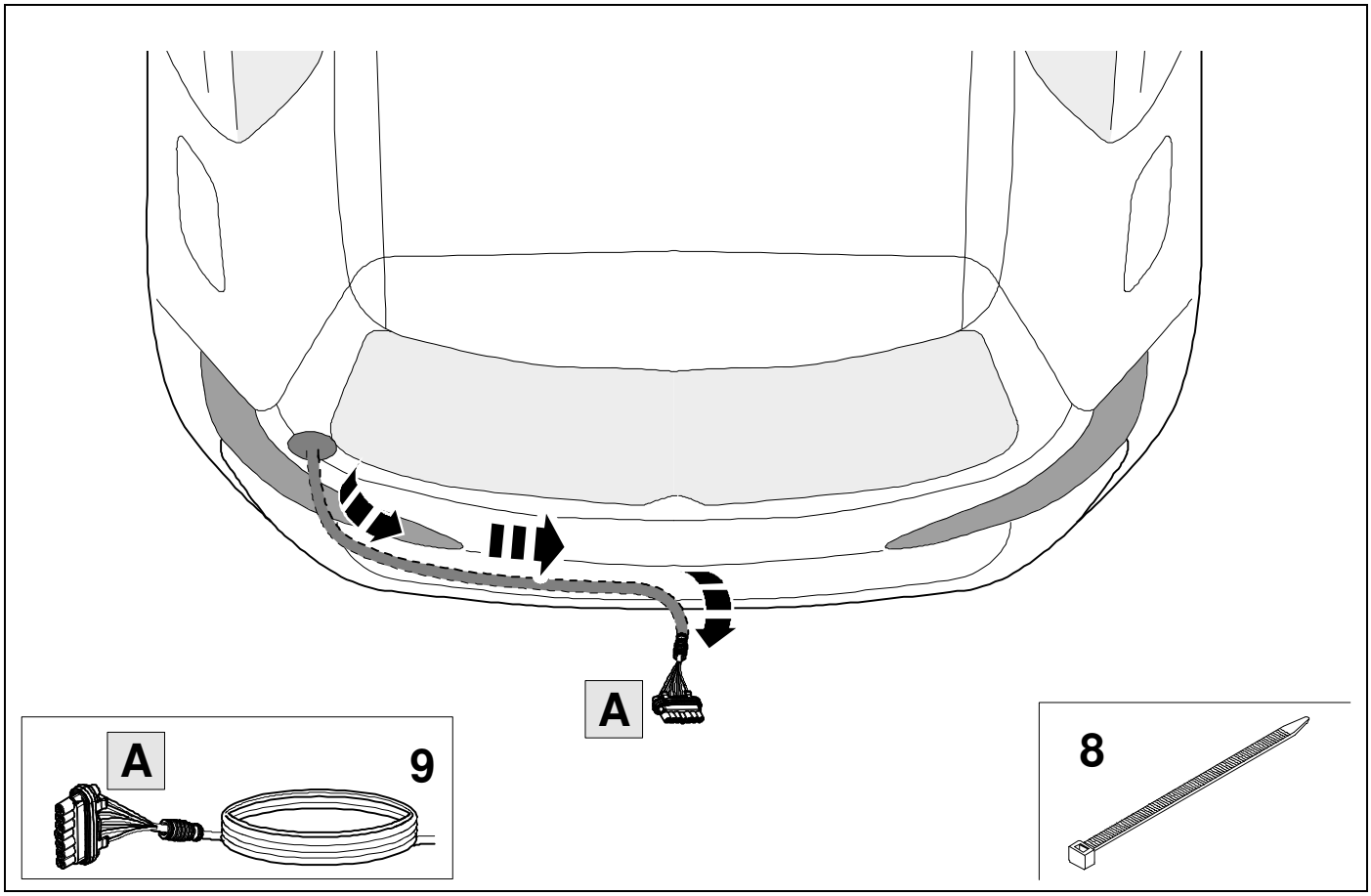

5 ⇨ 7

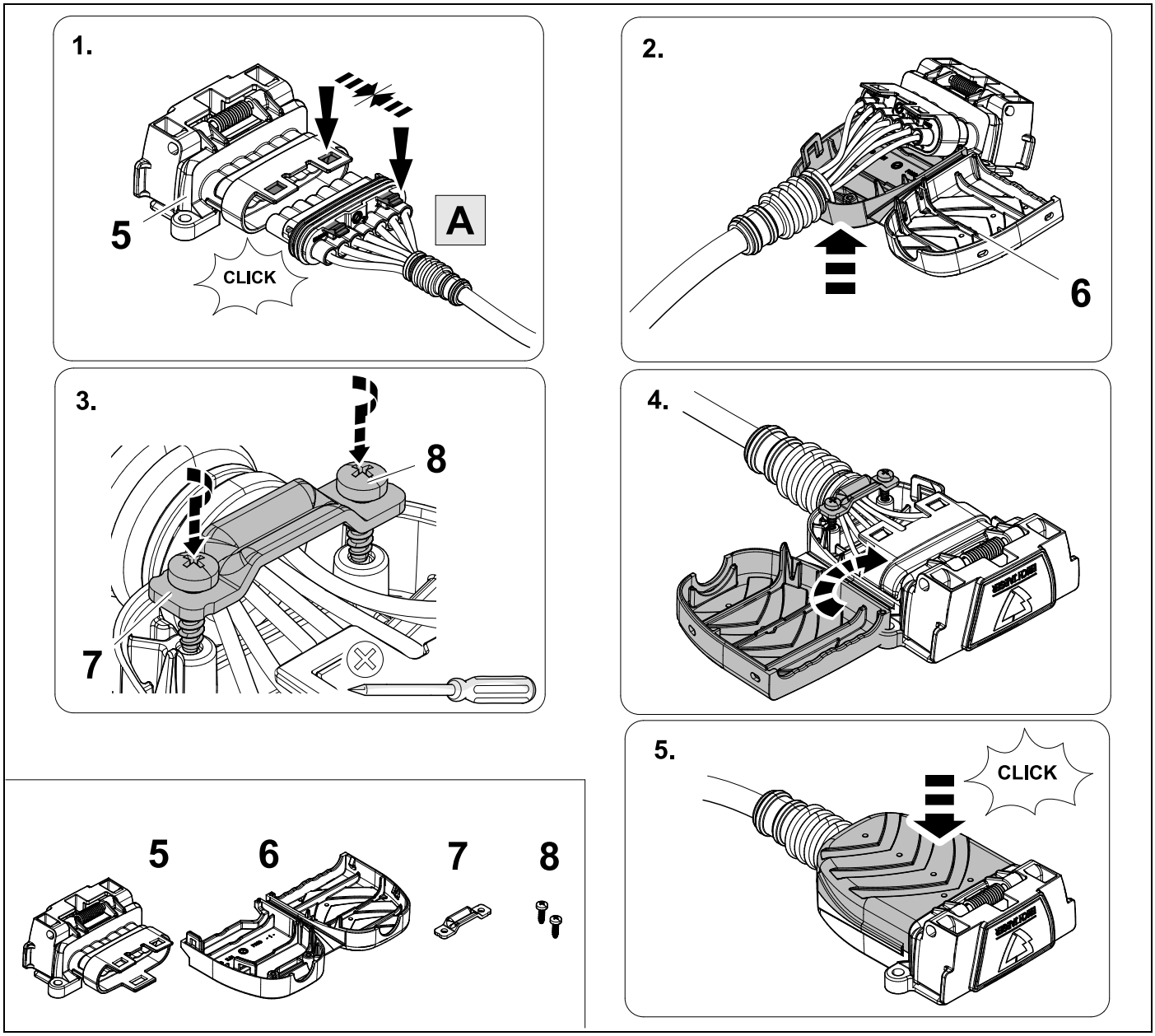

6

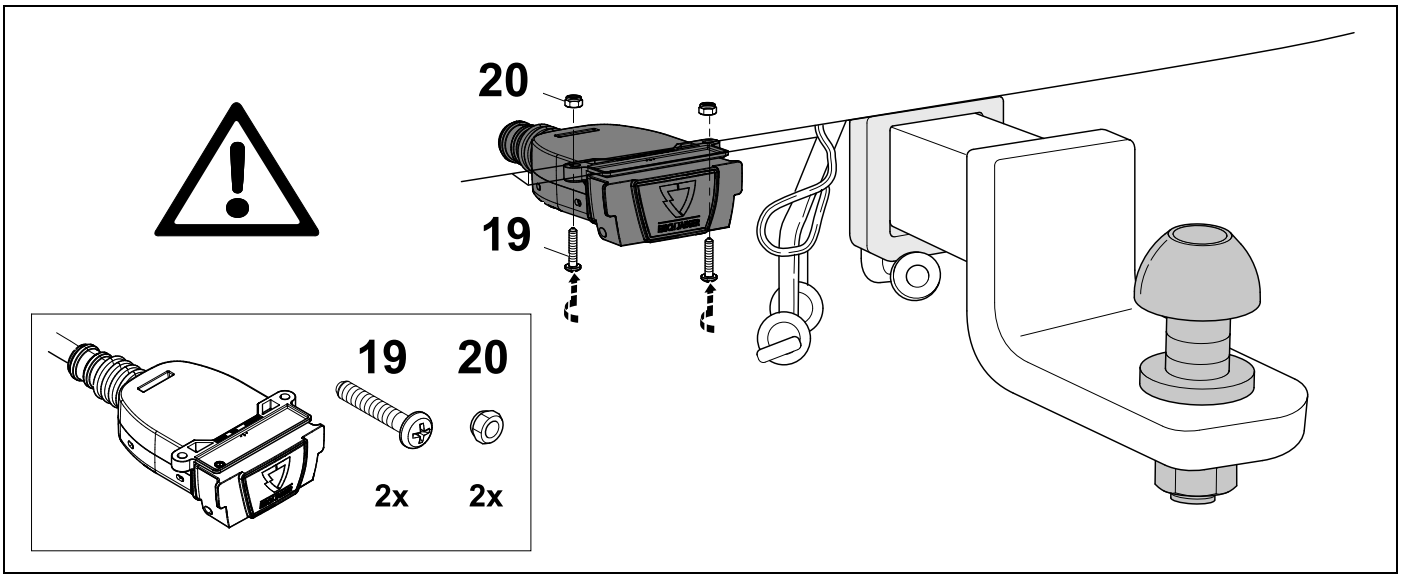

7 ⇨ **8**

1	ye	
2	bk	1 3 2 4 R
3	wh	
4	gn	
5	bu	
6	rd	Stop
7	bn	

8	bk	wh	gy	gn	rd	bu	ye	bn	pu	or	no
GB	black	white	grey	green	red	blue	yellow	brown	purple	orange	not occupied

9

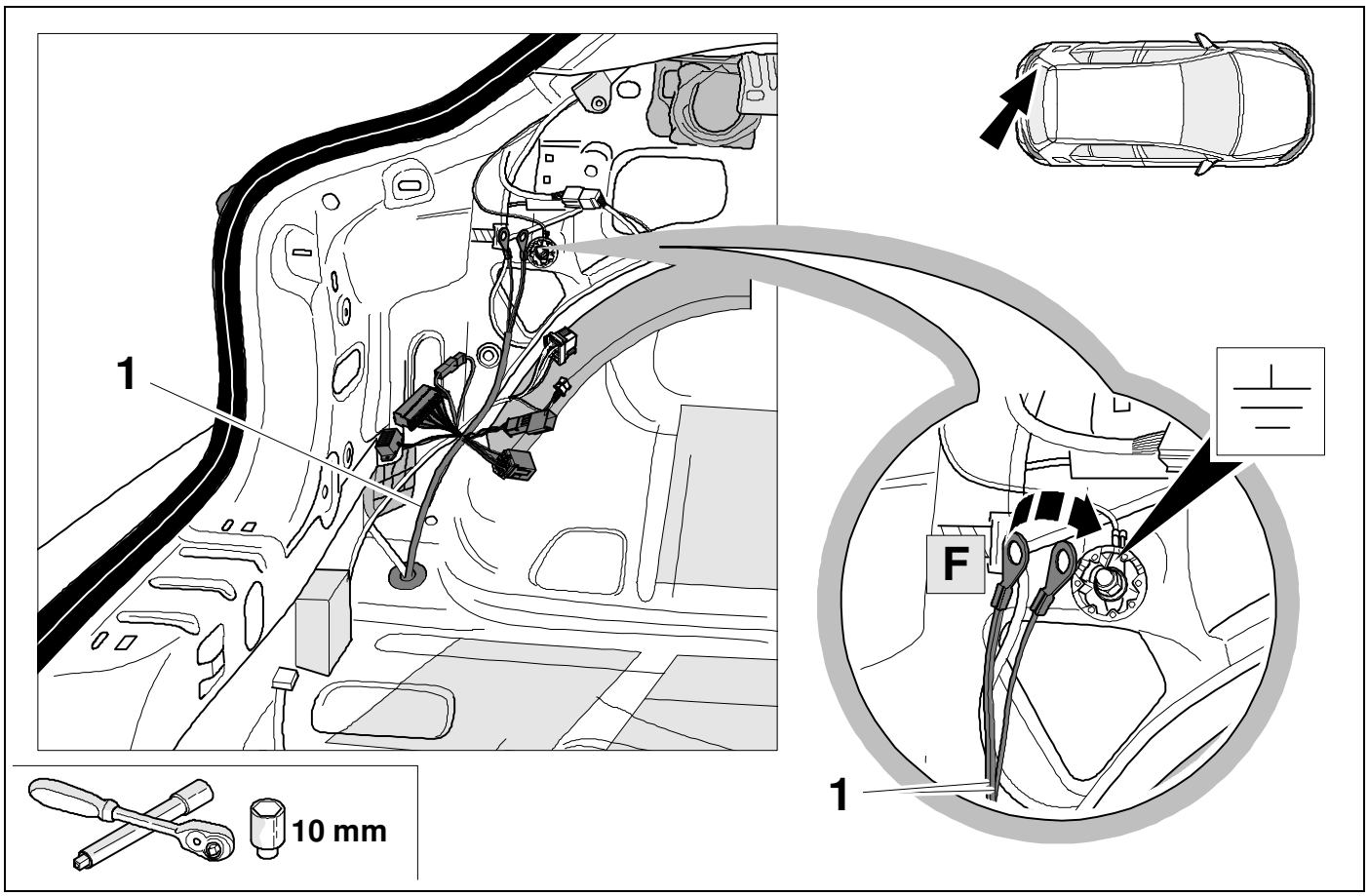

10 ⇨ 8

Vehicles with trailer preparation

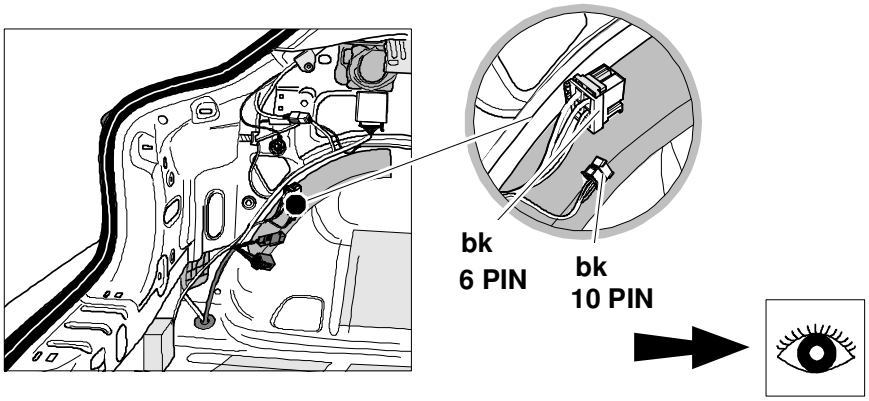

OPTION 1

11 ⇨ 17

33 ⇨ 44

Vehicles without trailer preparation

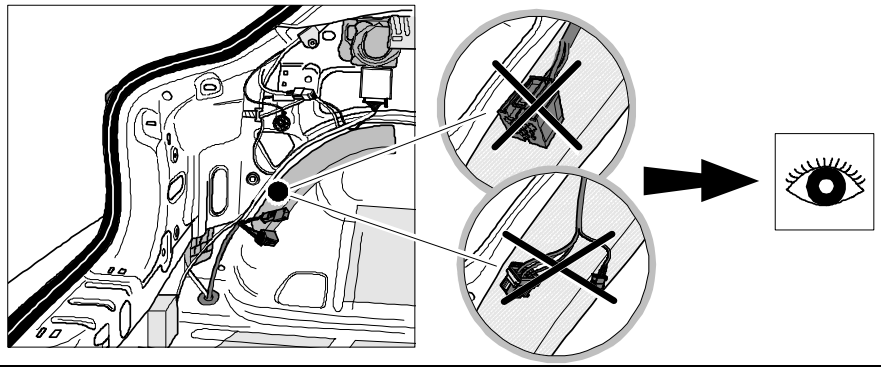

OPTION 2

18 ⇨ 44

11 ⇨ 8

OPTION 1

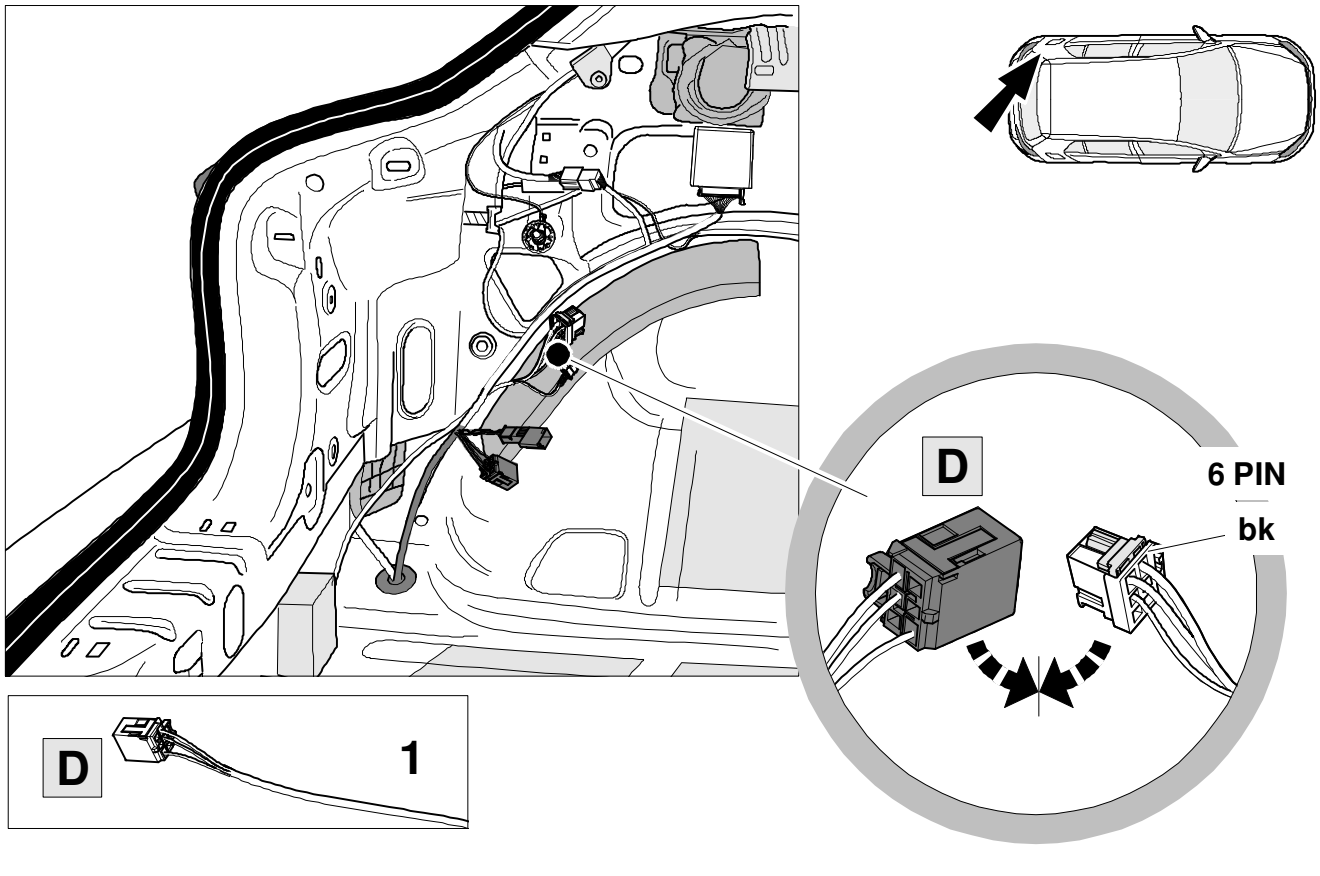

12 **OPTION 1**

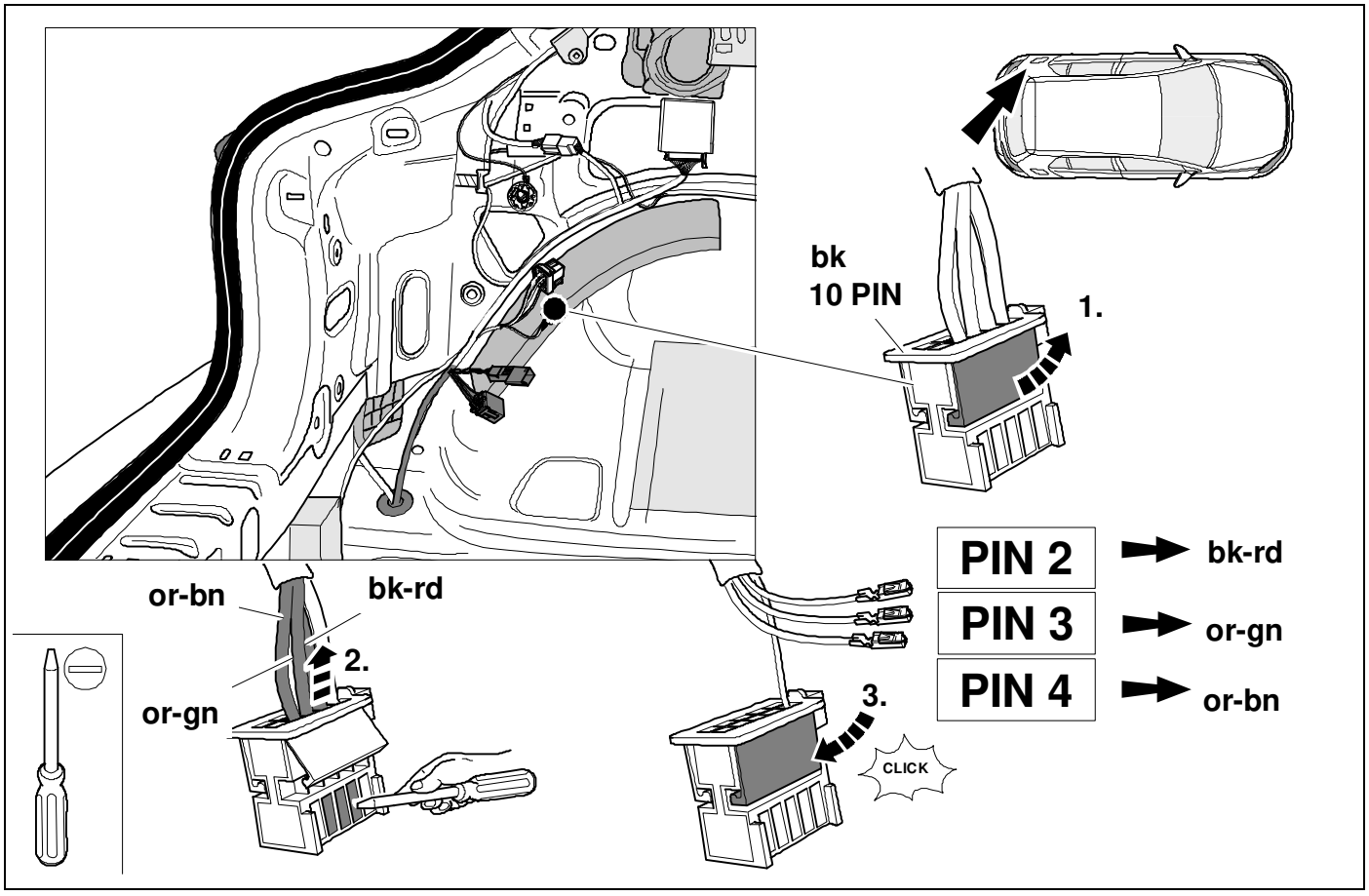

13 ⇨ **8** **OPTION 1**

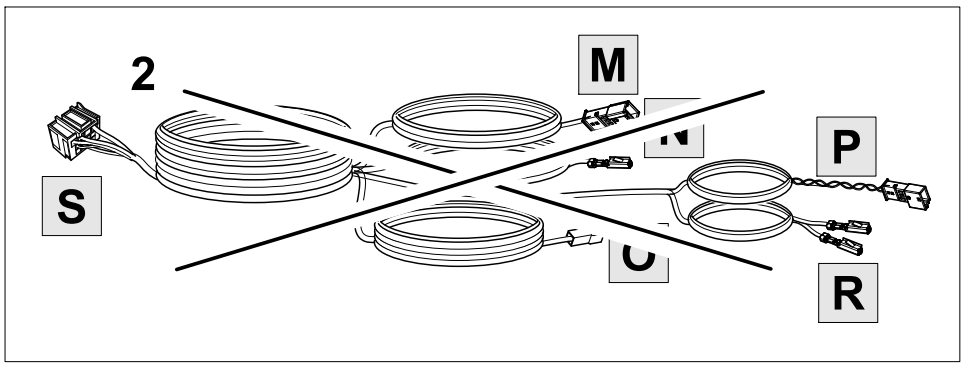

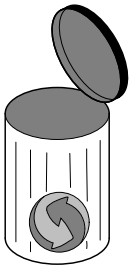

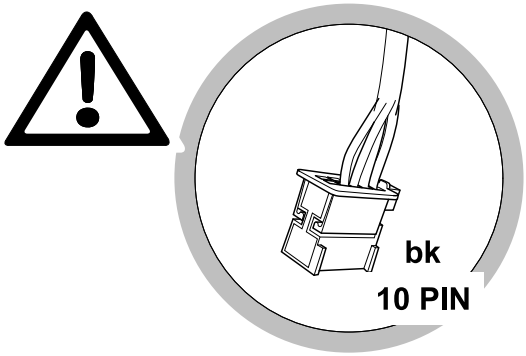

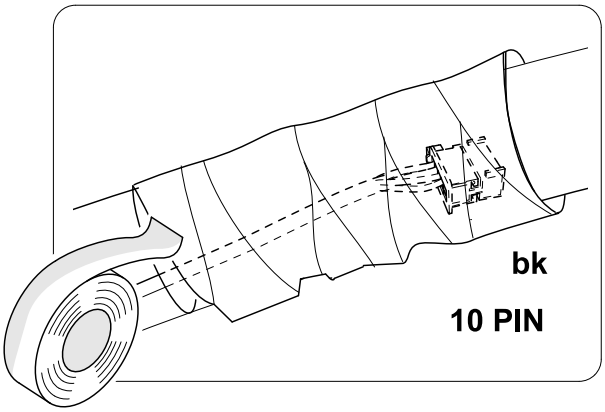

14 ⇨ **8** **OPTION 1**

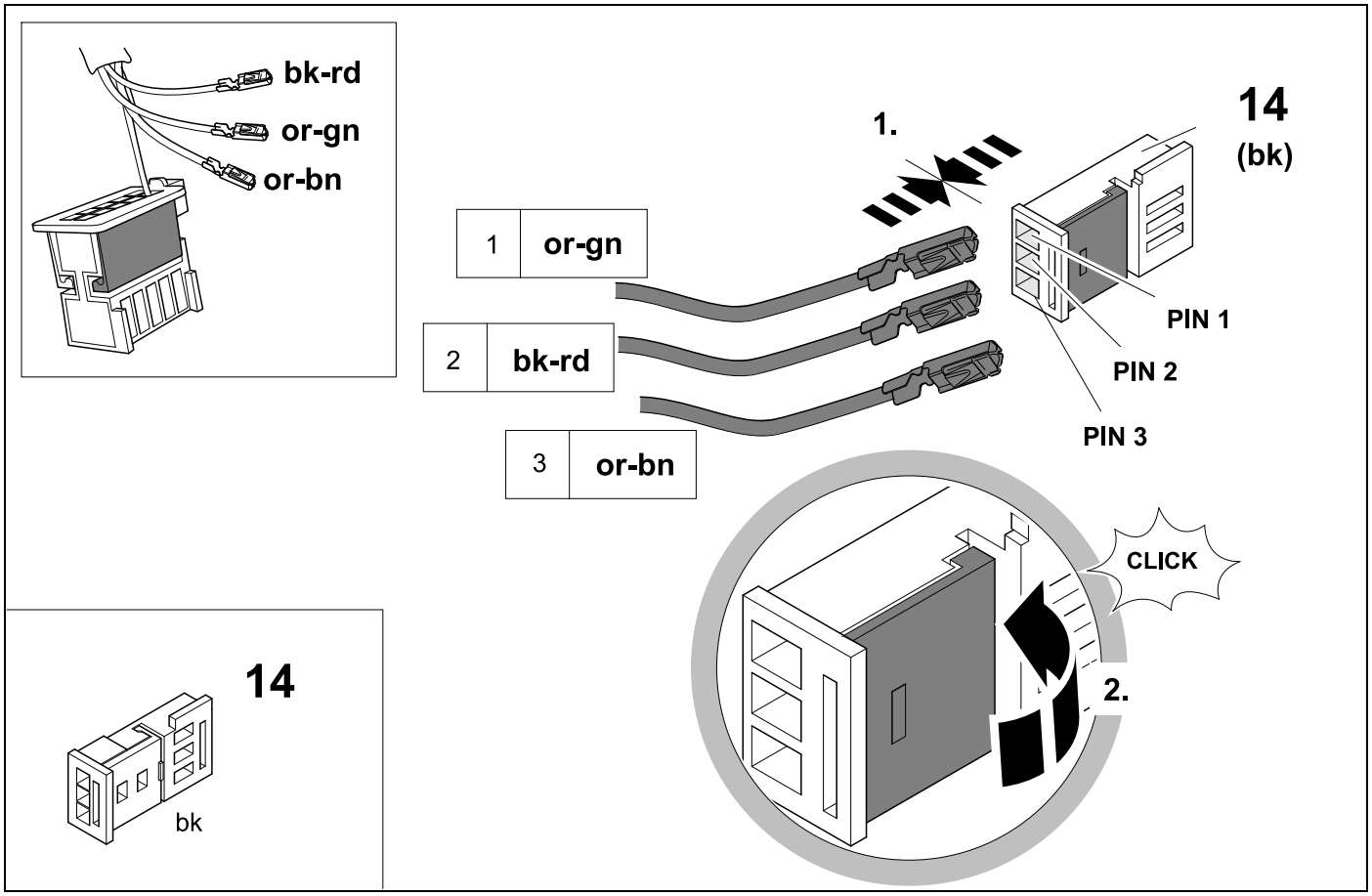

15 **OPTION 1**

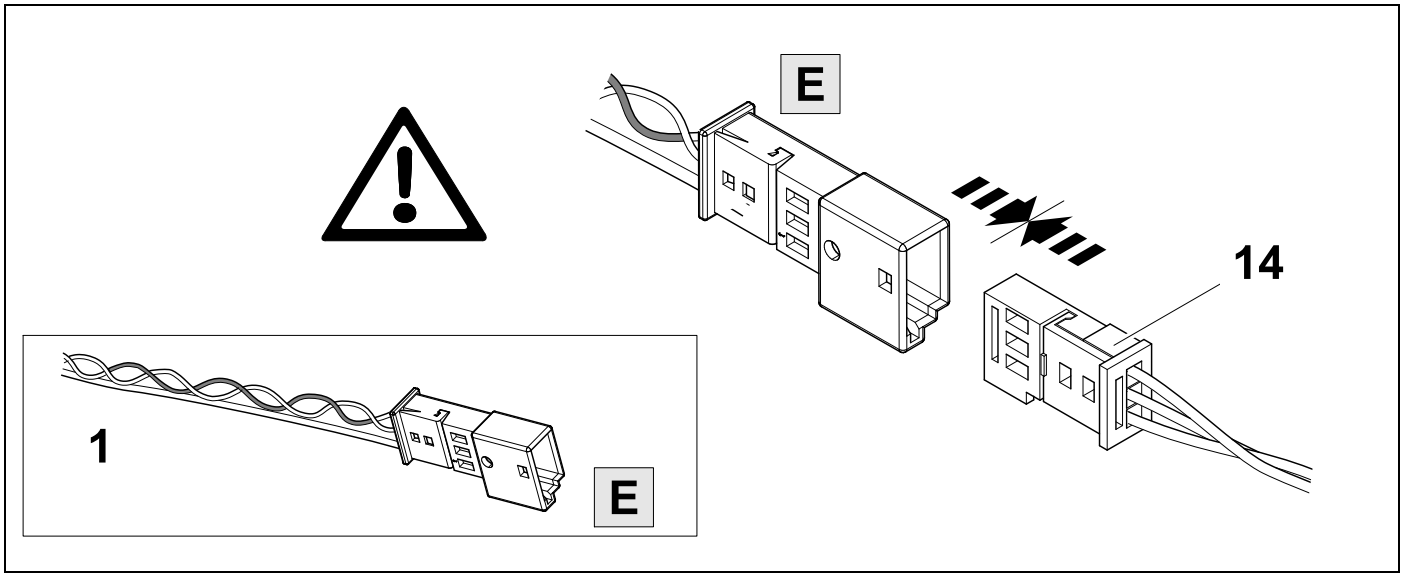

16 ⇨ **8** **OPTION 1**

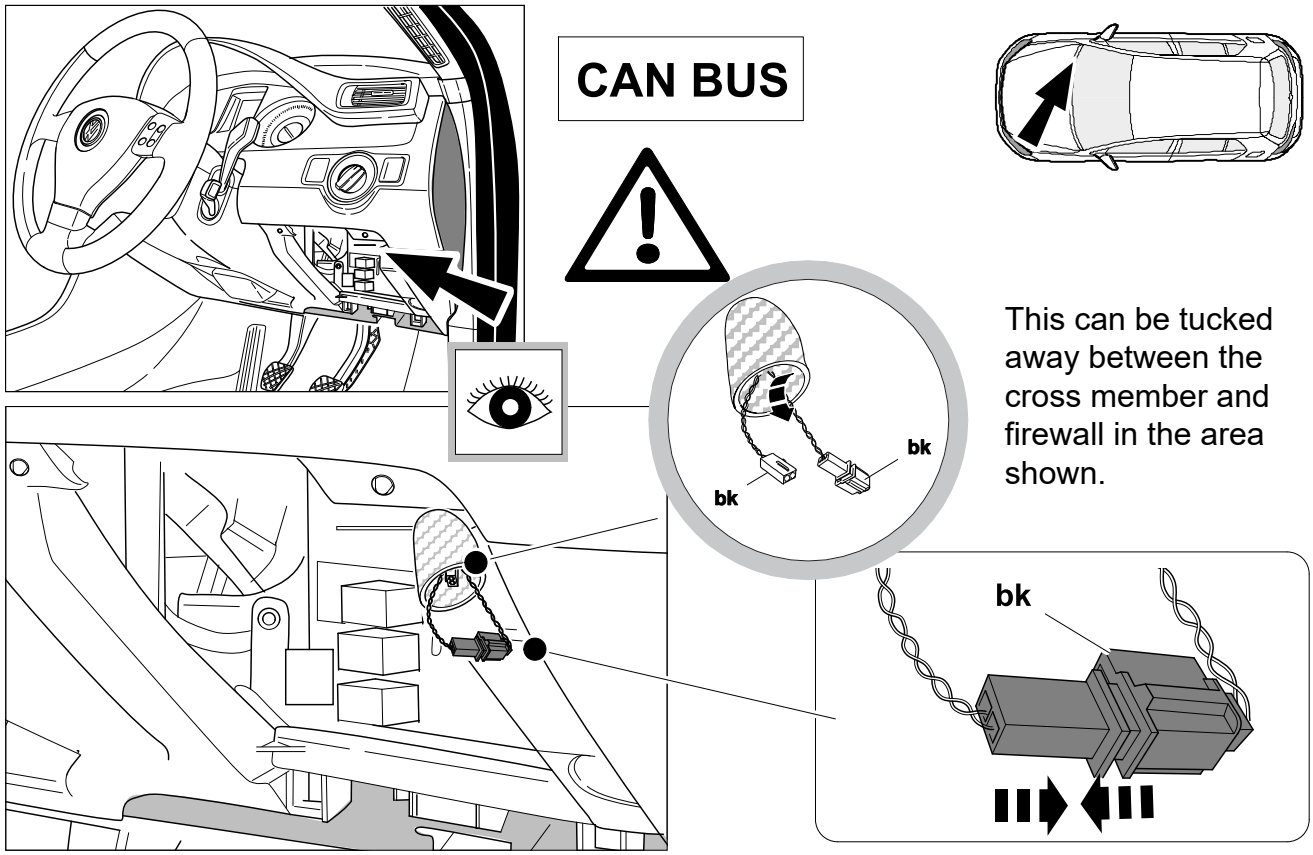

17 **OPTION 1**

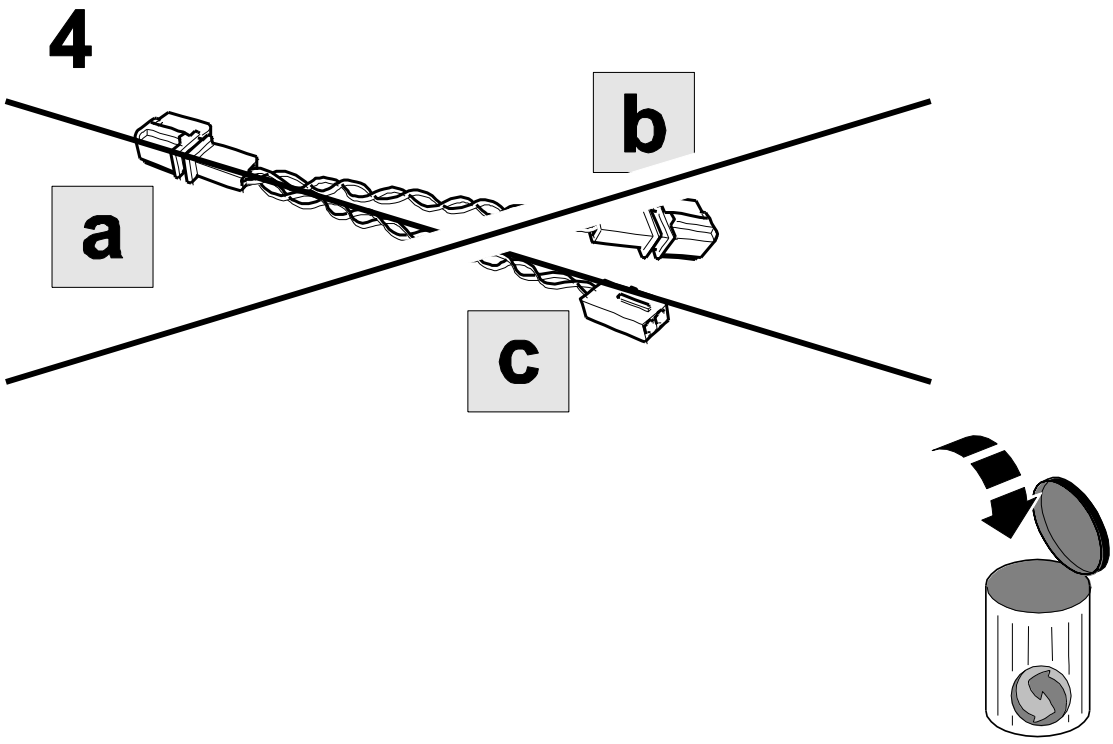

18

OPTION 2

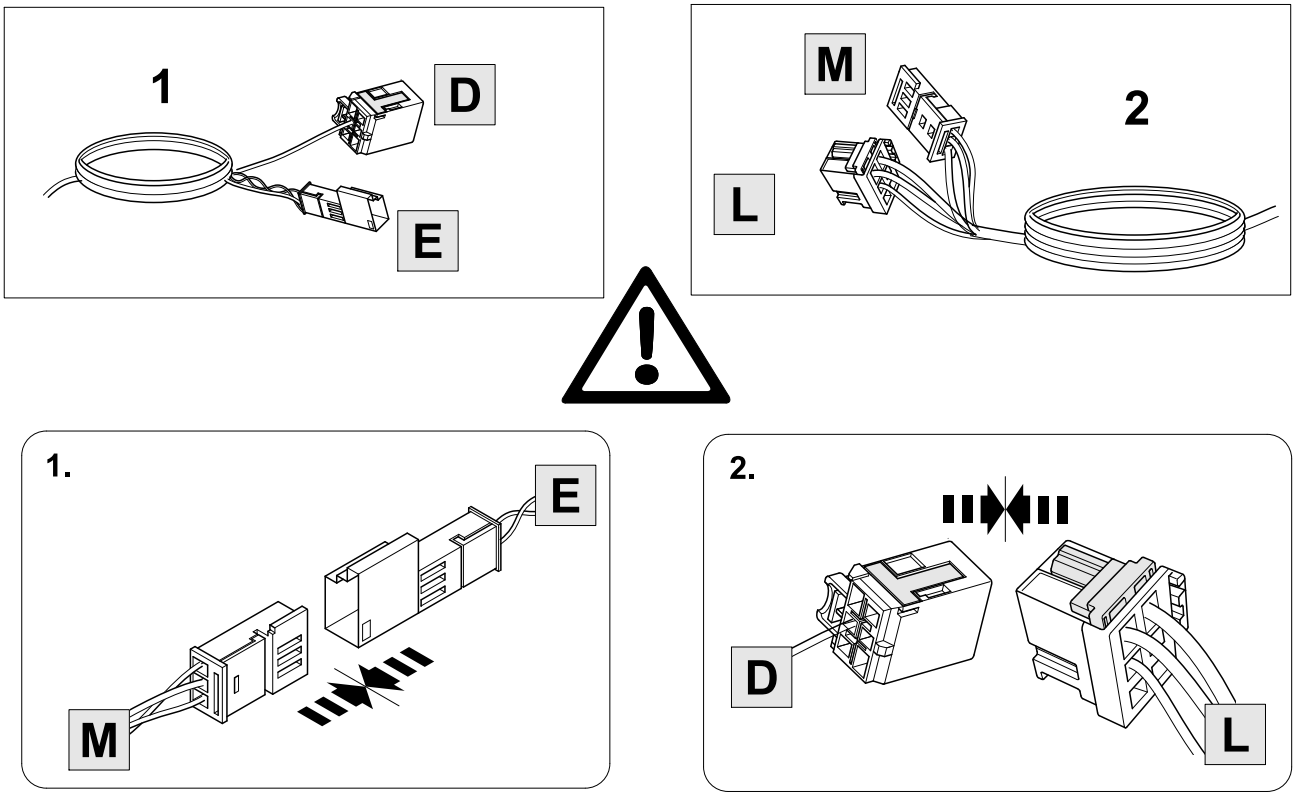

19

OPTION 2

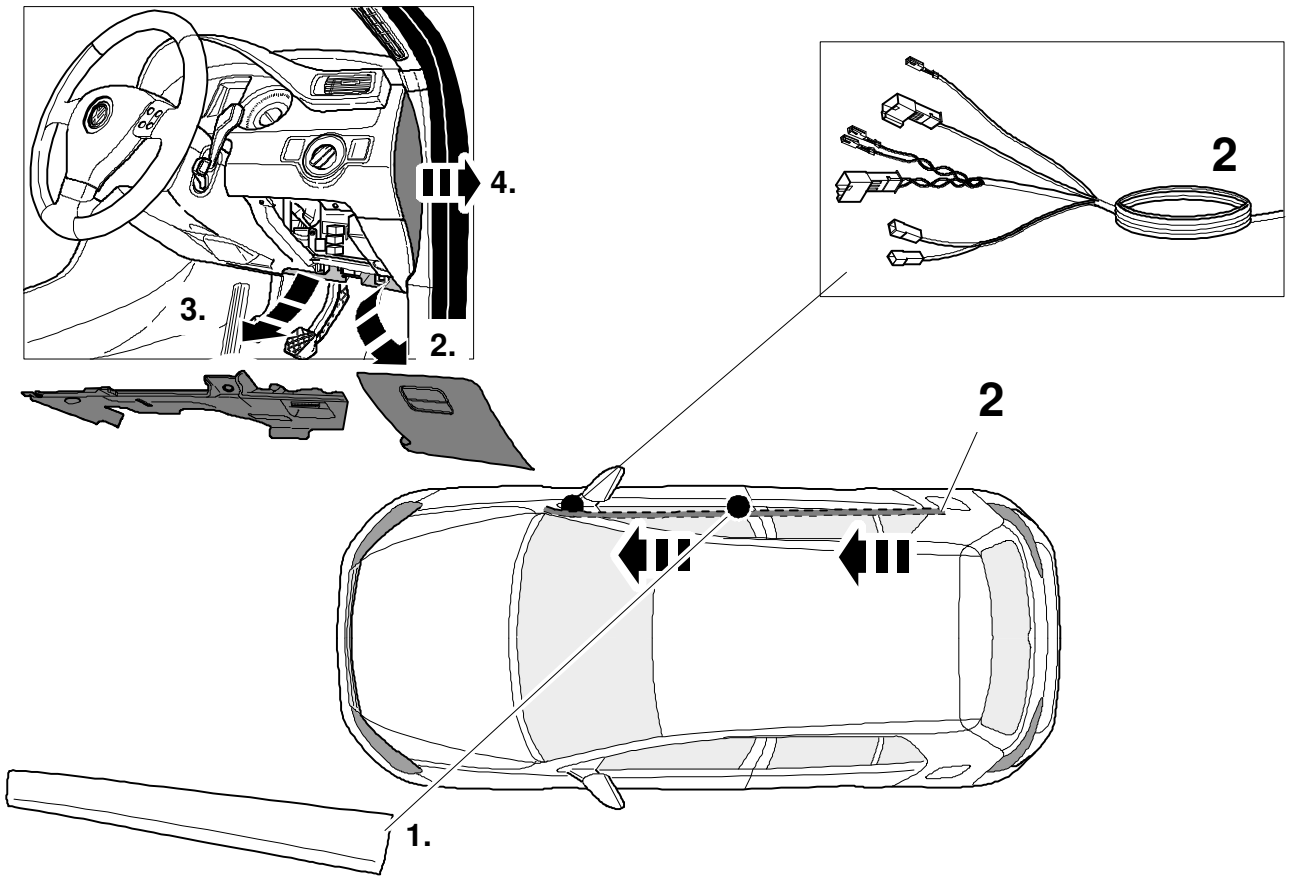

20

OPTION 2

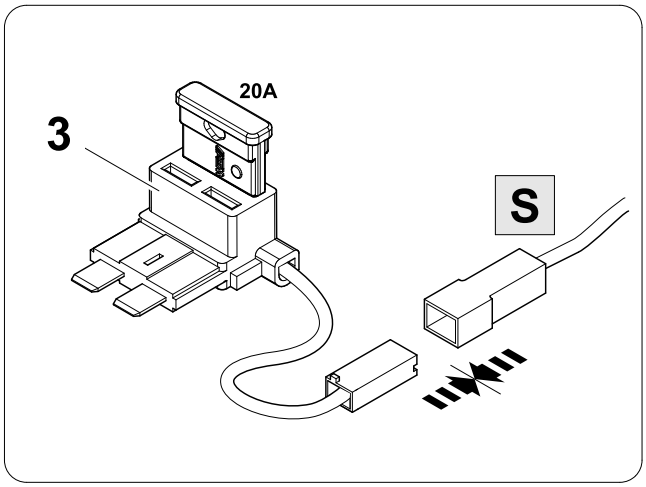

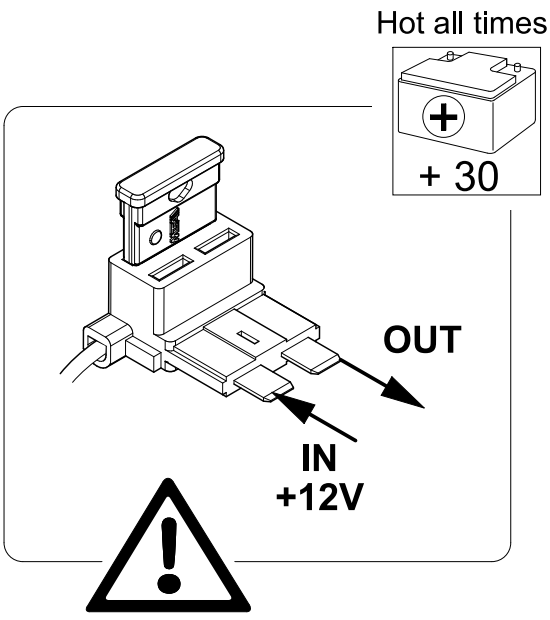

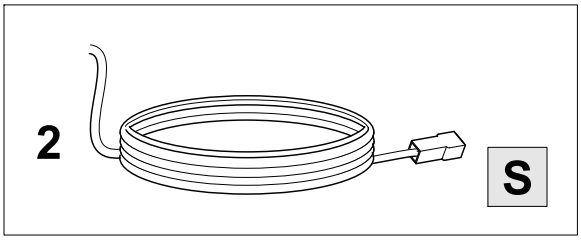

21 ⇨ **39**

OPTION 2

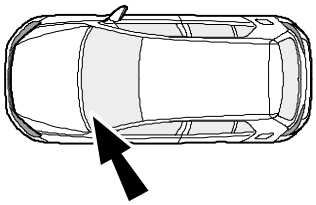

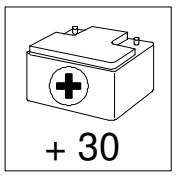

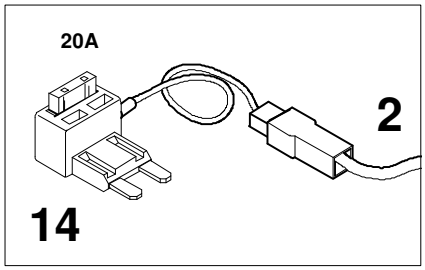

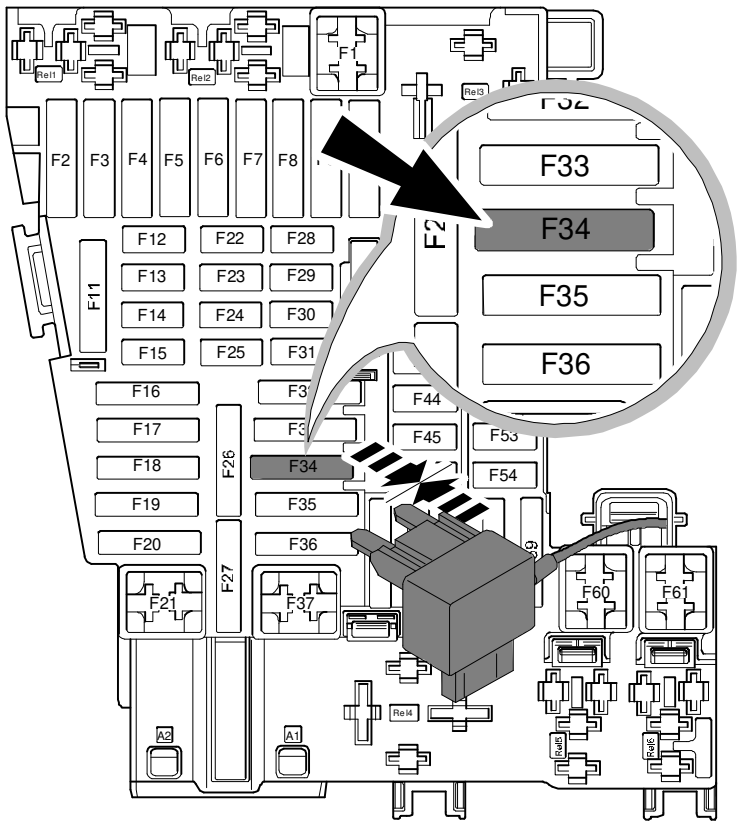

22 **OPTION 2**

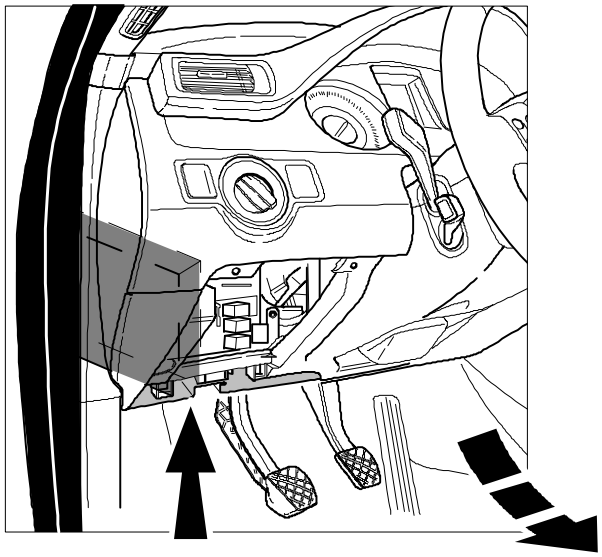

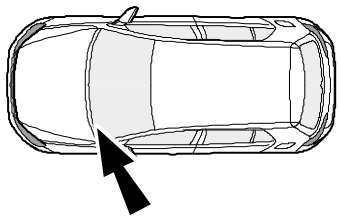

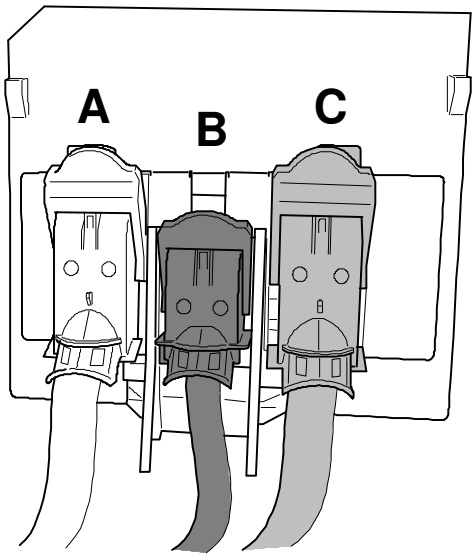

BCM

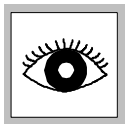

23 ⇨ **8** **OPTION 2**

CAN

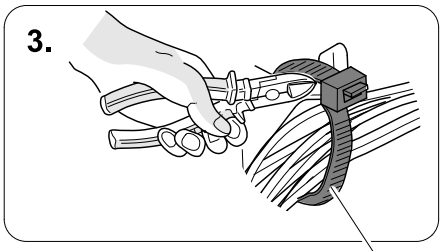

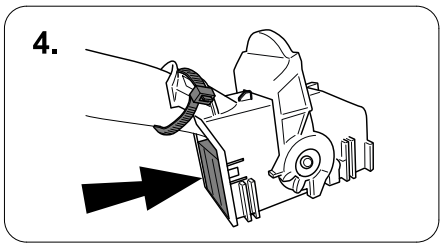

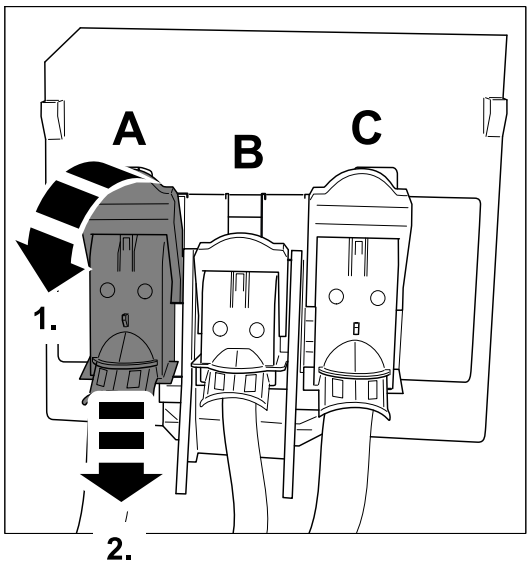

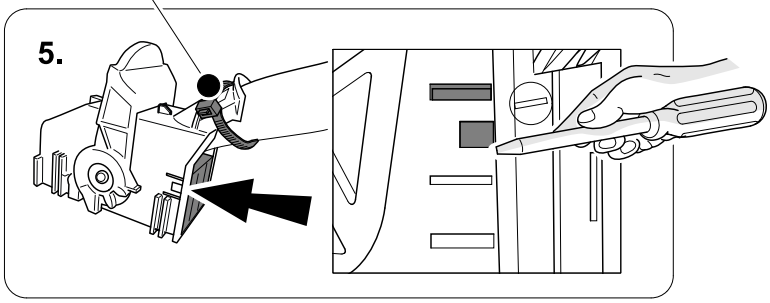

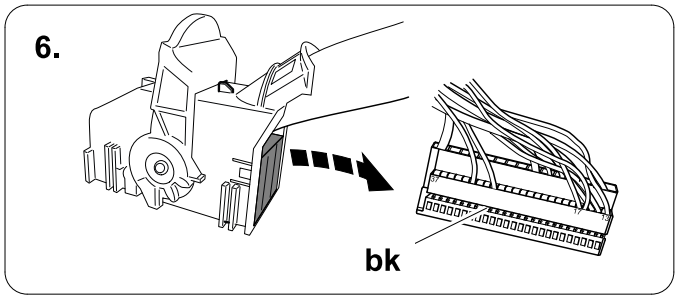

24 **8** **OPTION 2**

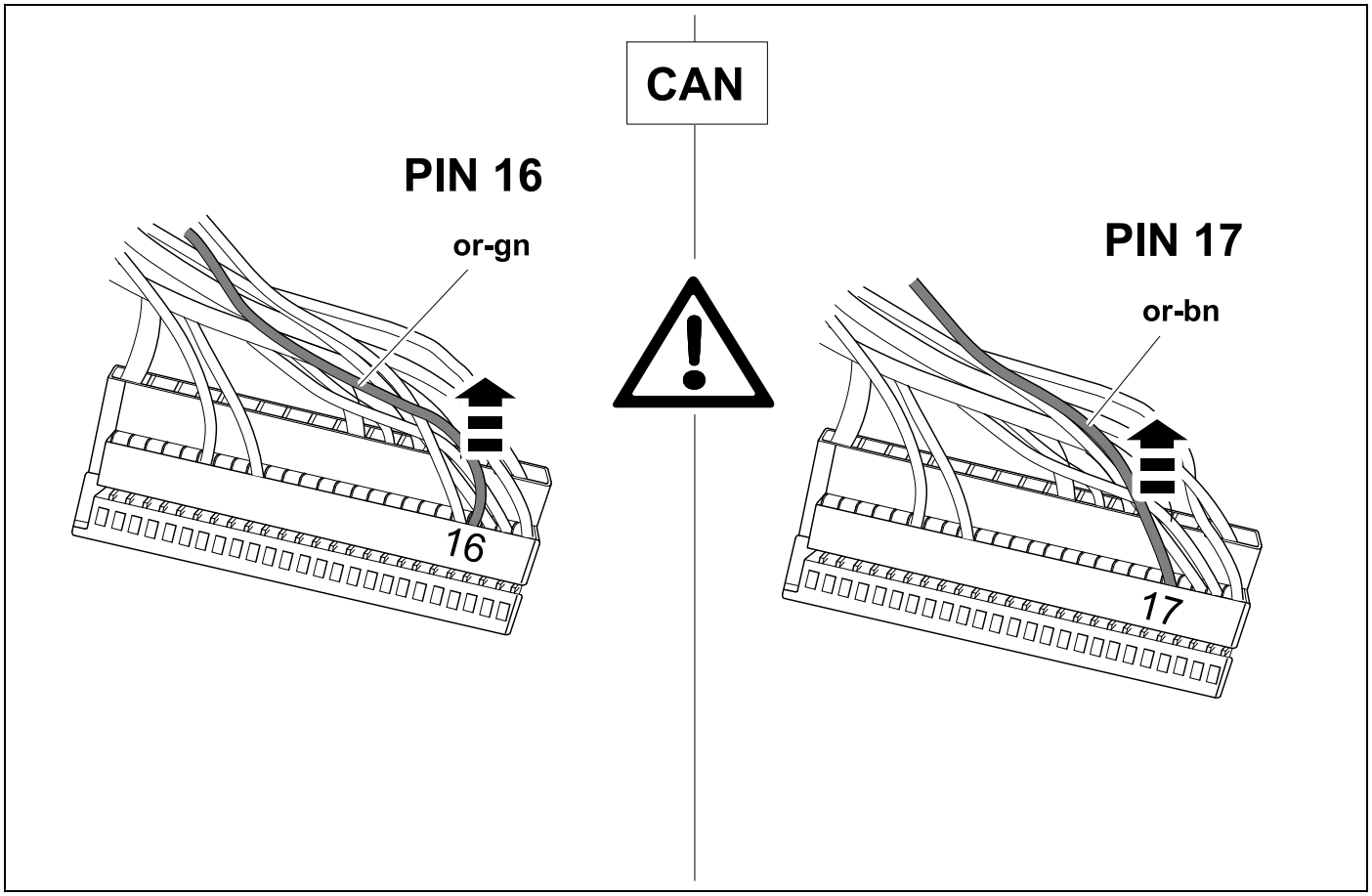

25 **8** **OPTION 2**

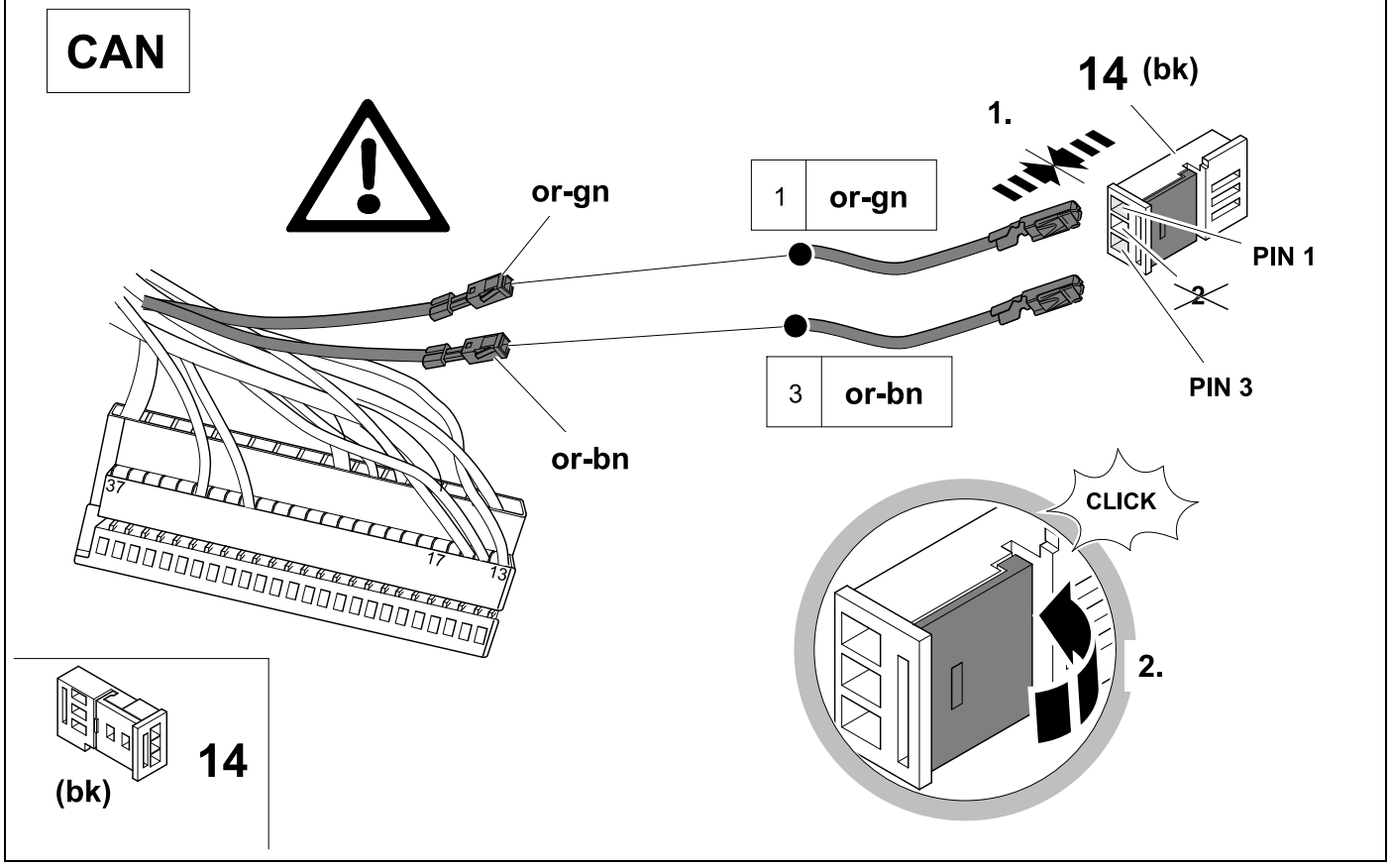

26 ⇨ 8 **OPTION 2**

CAN

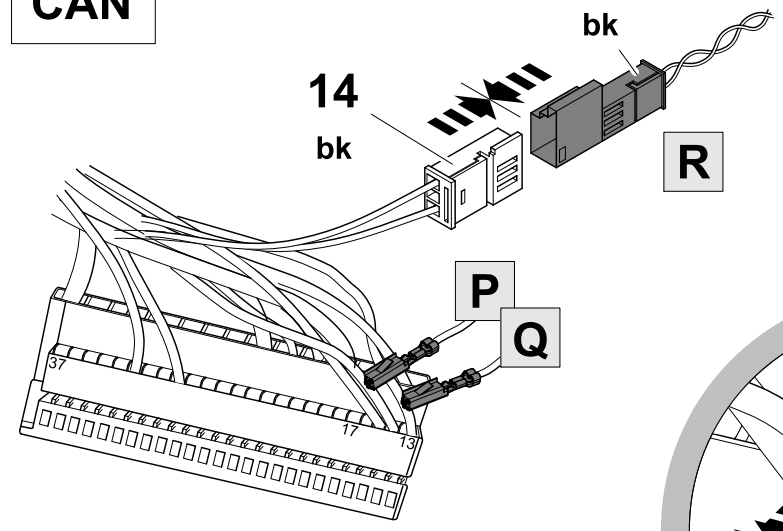

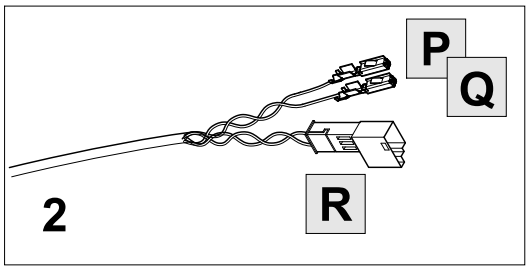

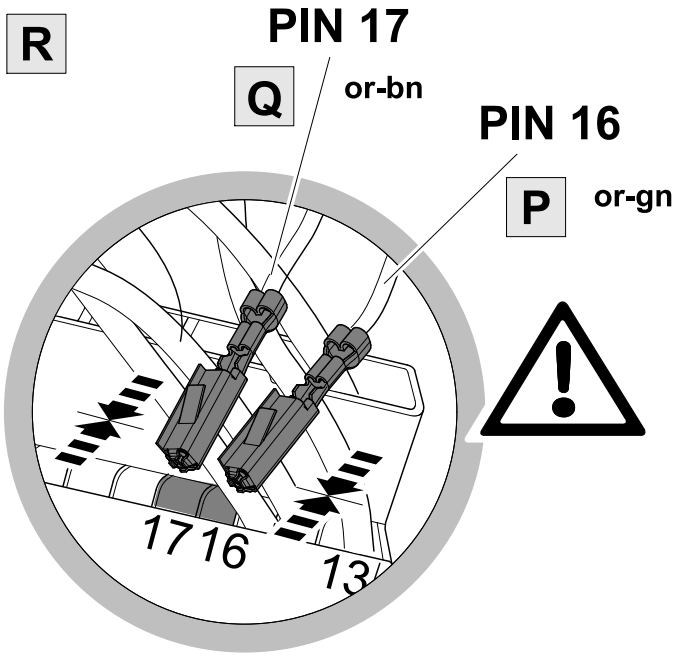

27 ⇨ 8 **OPTION 2**

CAN

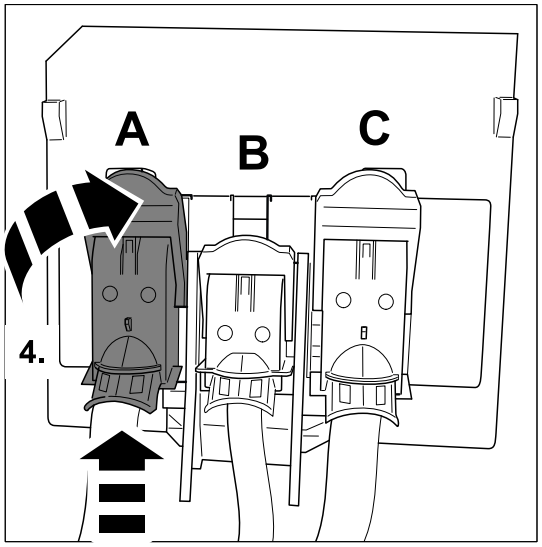

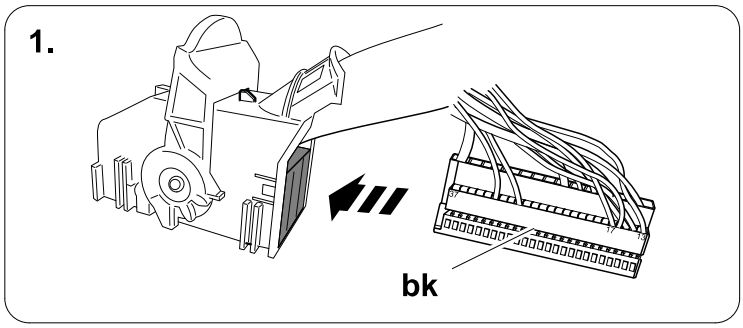

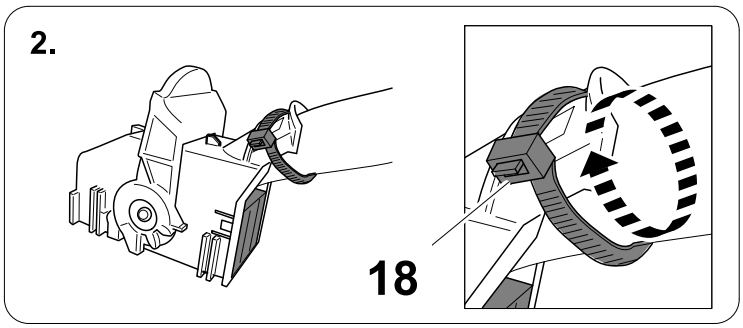

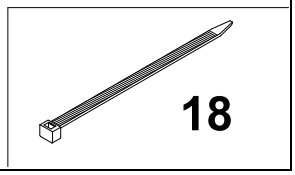

28 ⇨ 8 **OPTION 2**

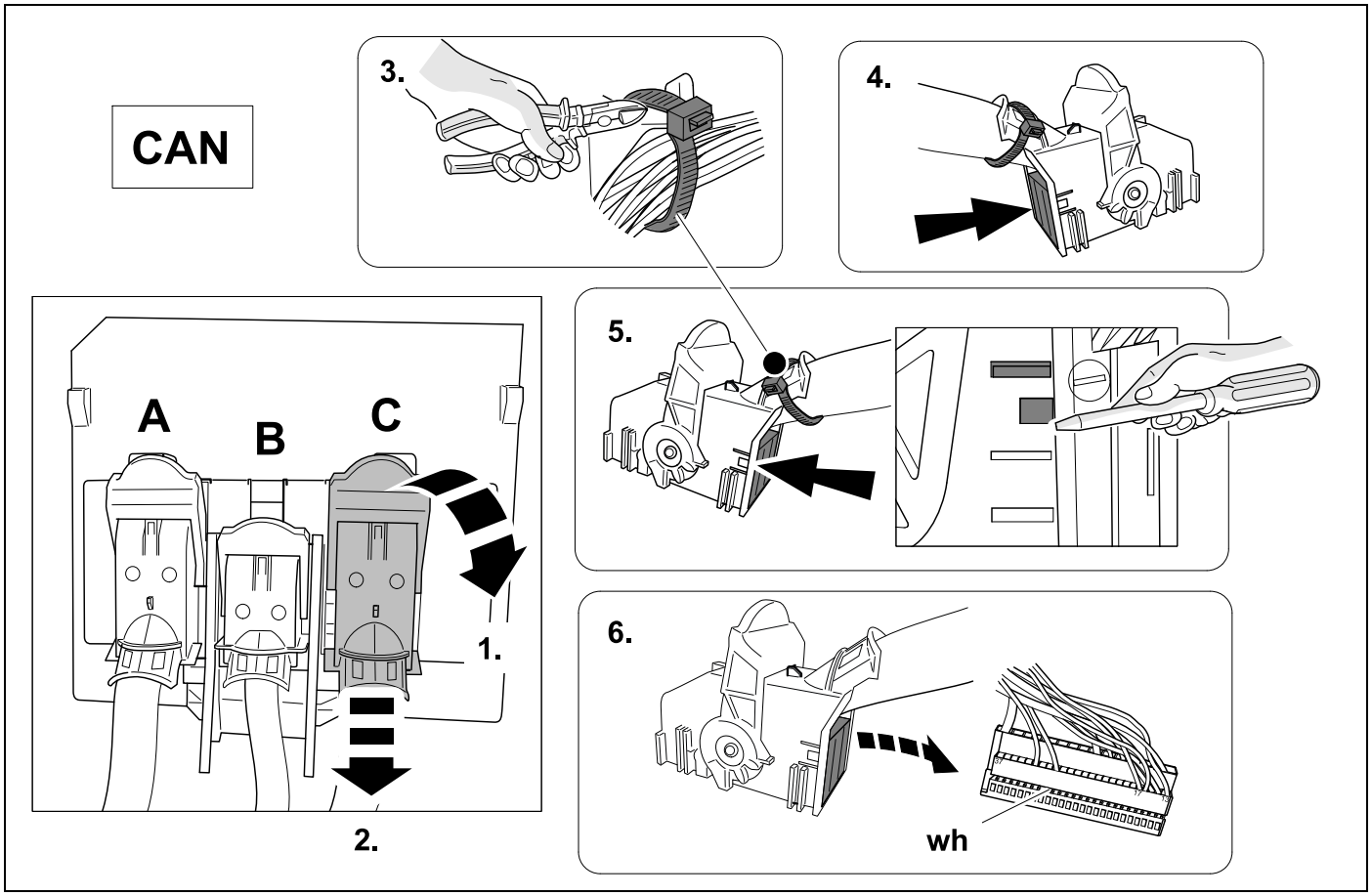

29 ⇨ 8 **OPTION 2**

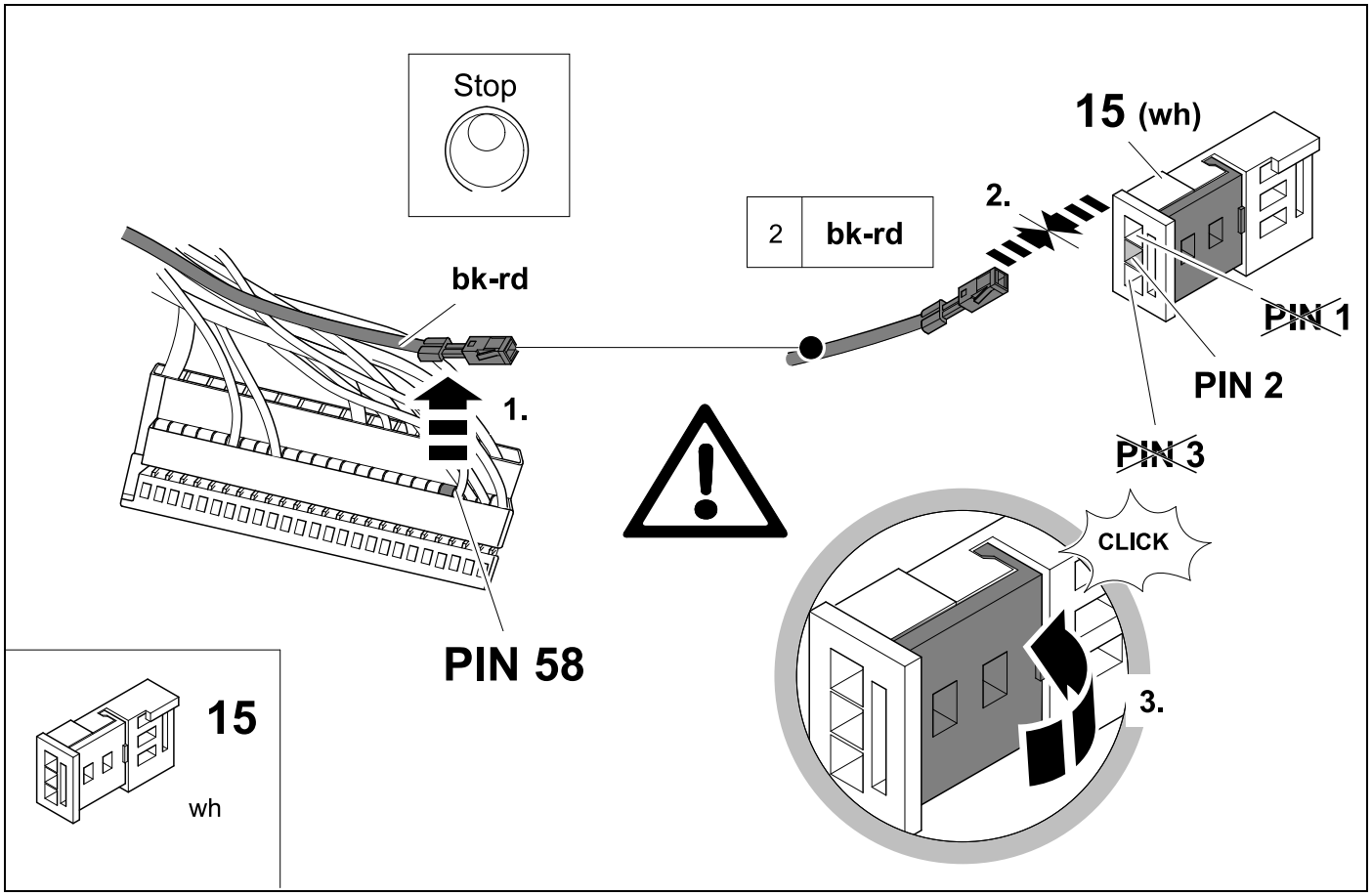

30 ⇨ **8** **OPTION 2**

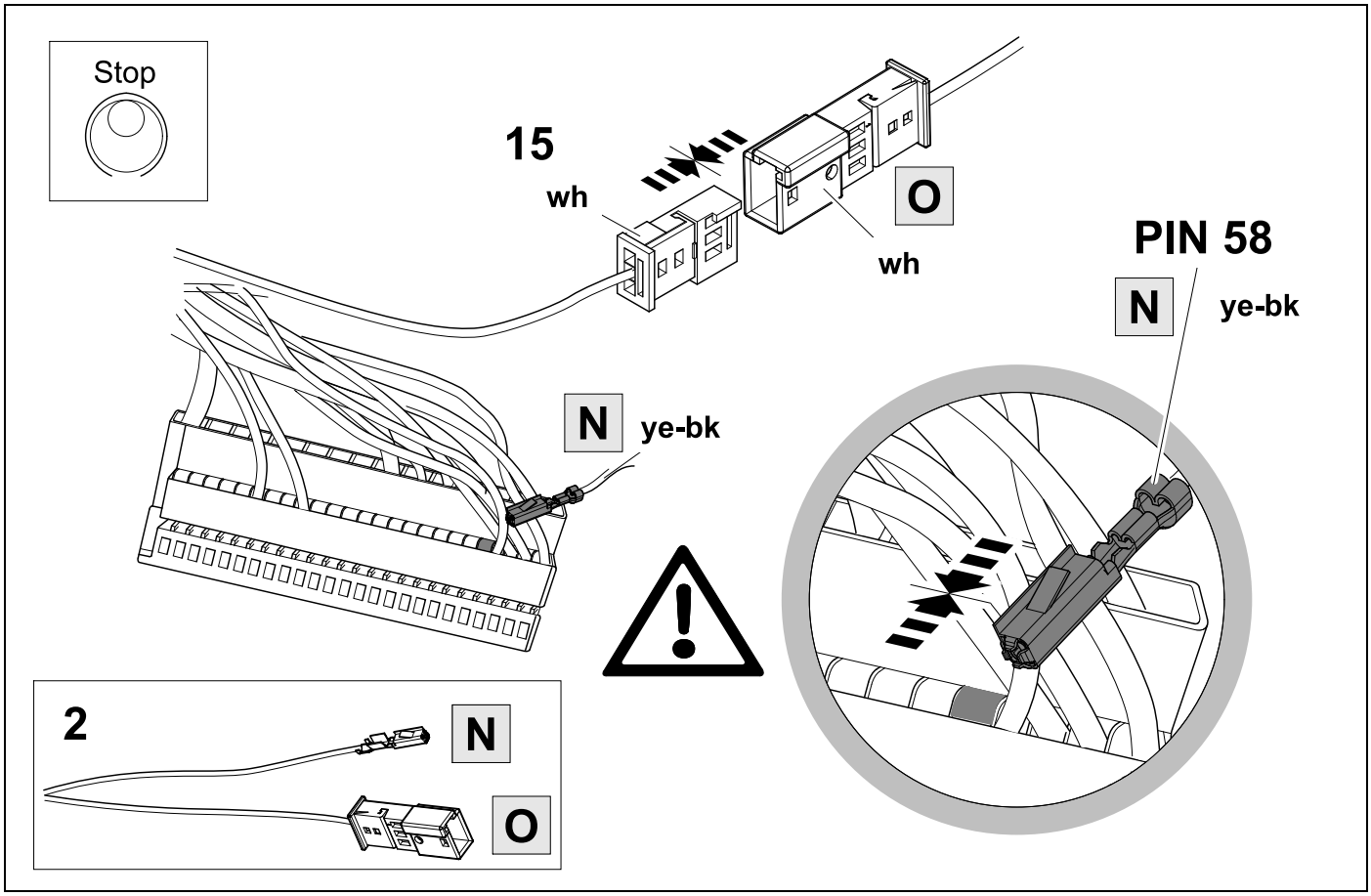

31 ⇨ **8** **OPTION 2**

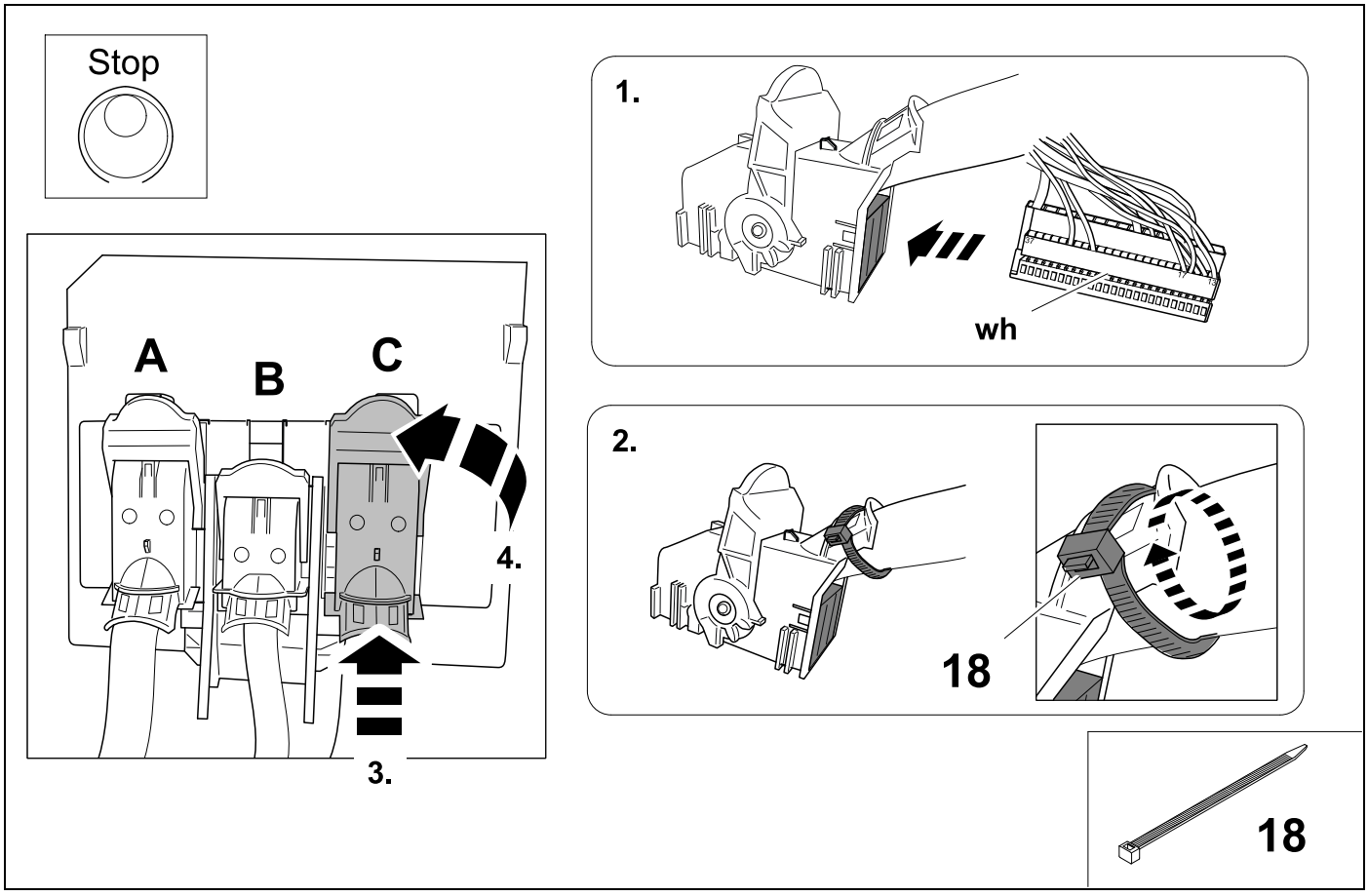

32

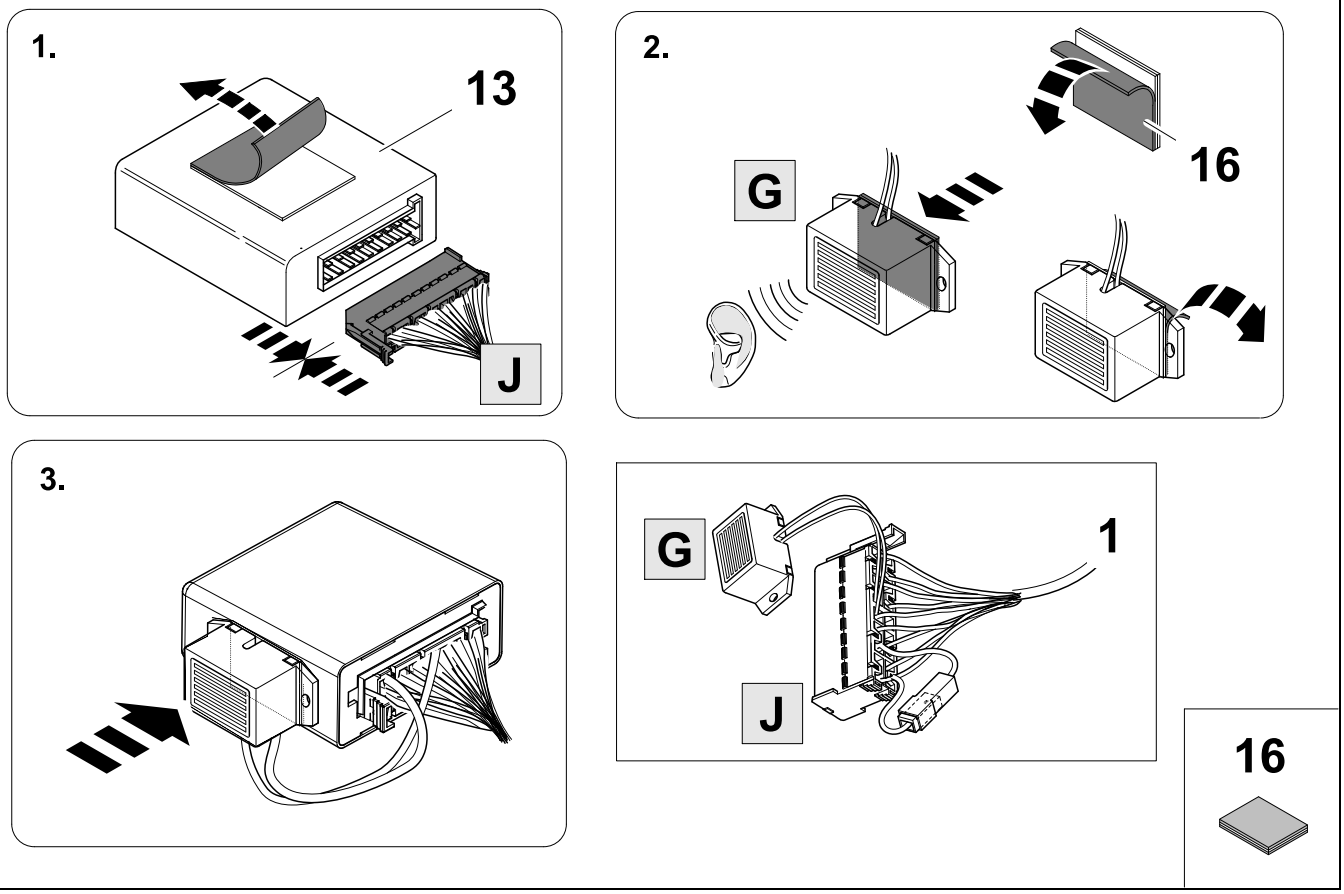

33

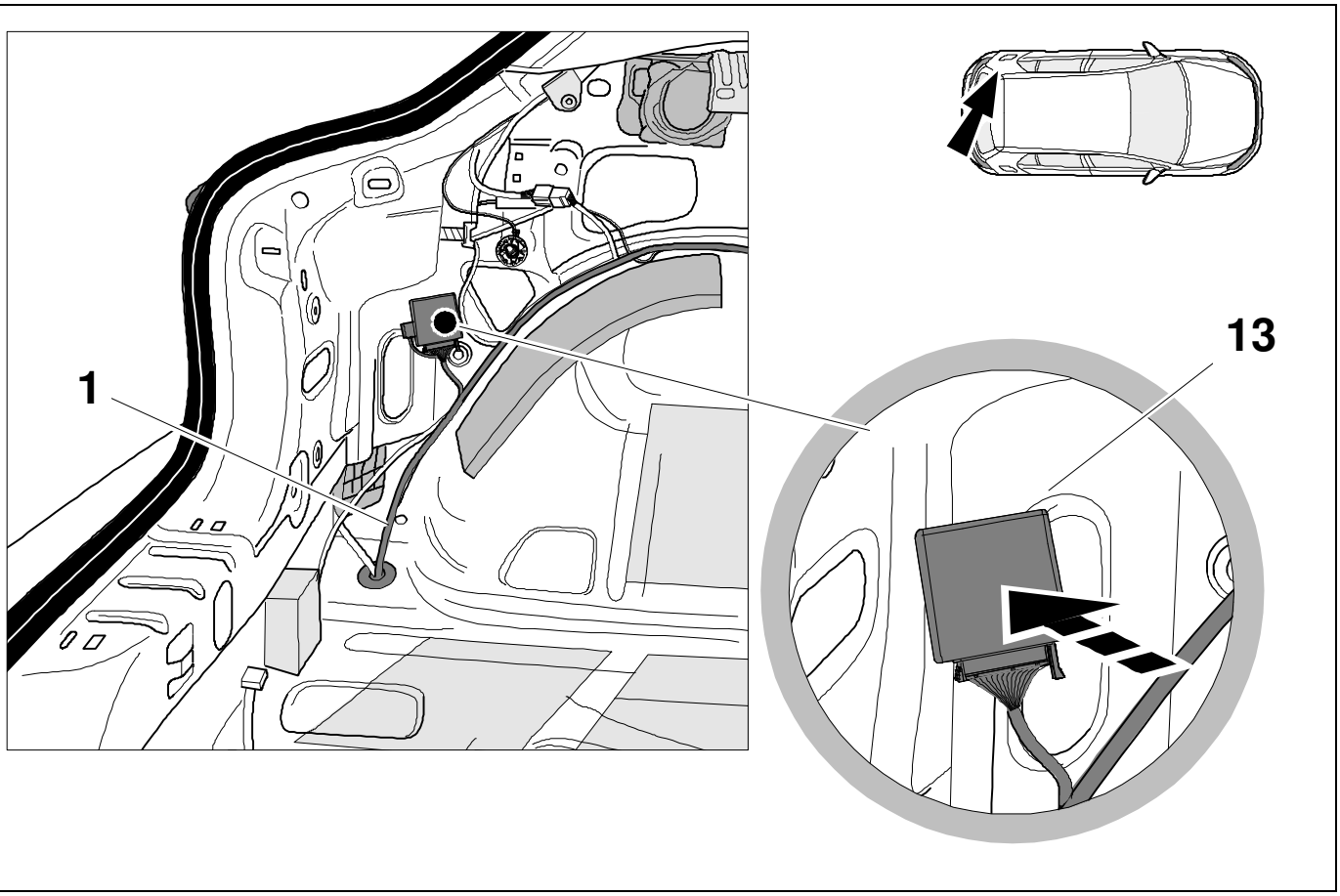

34 OPTIONAL ⇨ 8

BRAKE CONTROLLER PREPARED

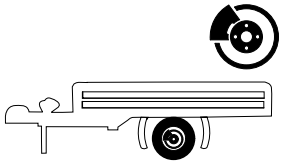

Trailer Brake Preparation

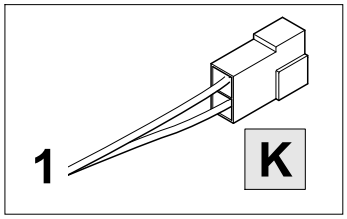

1.

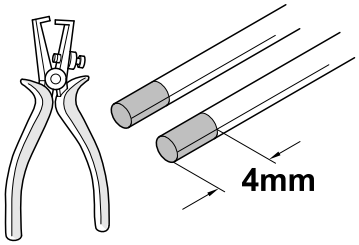

2.

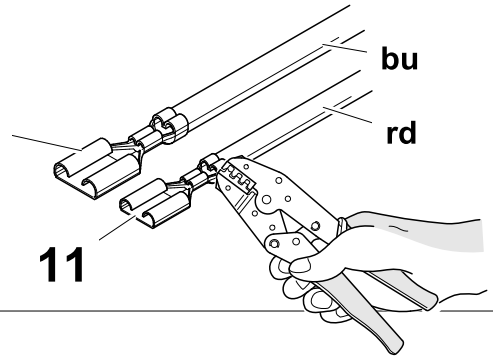

3.

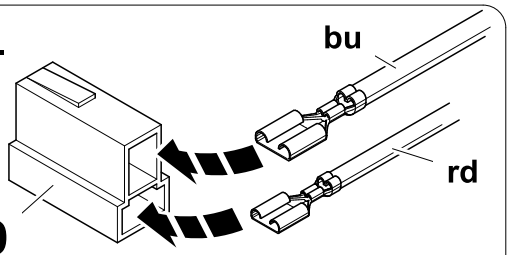

4.

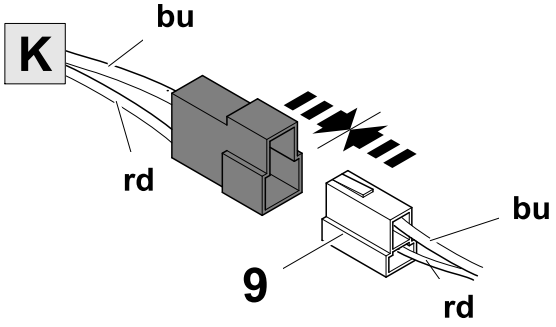

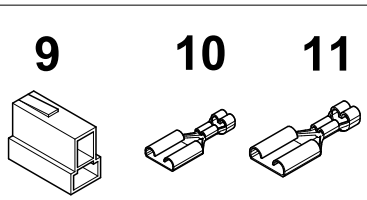

35

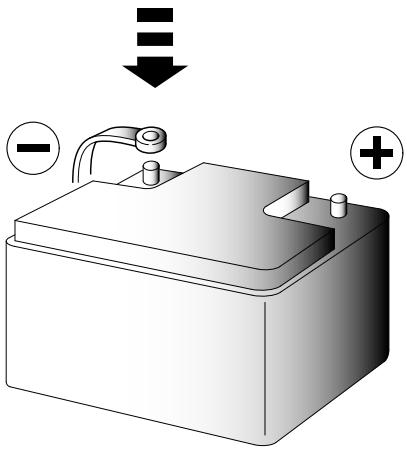

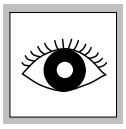

36

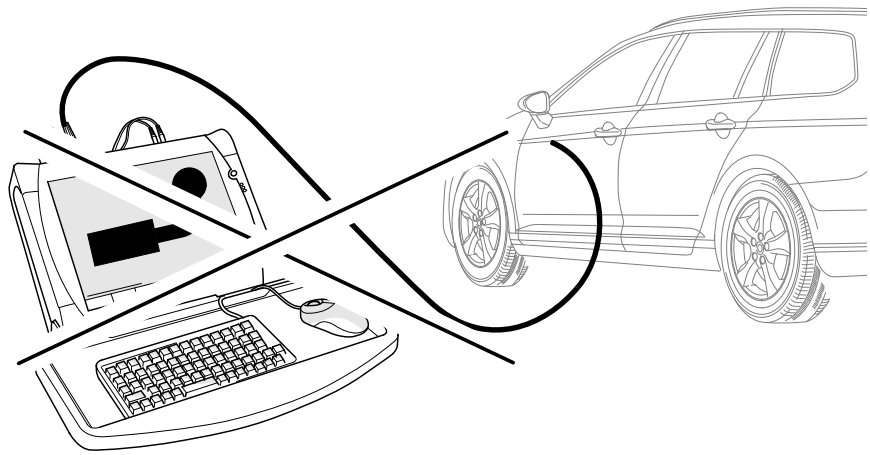

37 CHECK ALL LIGHTING FUNCTIONS

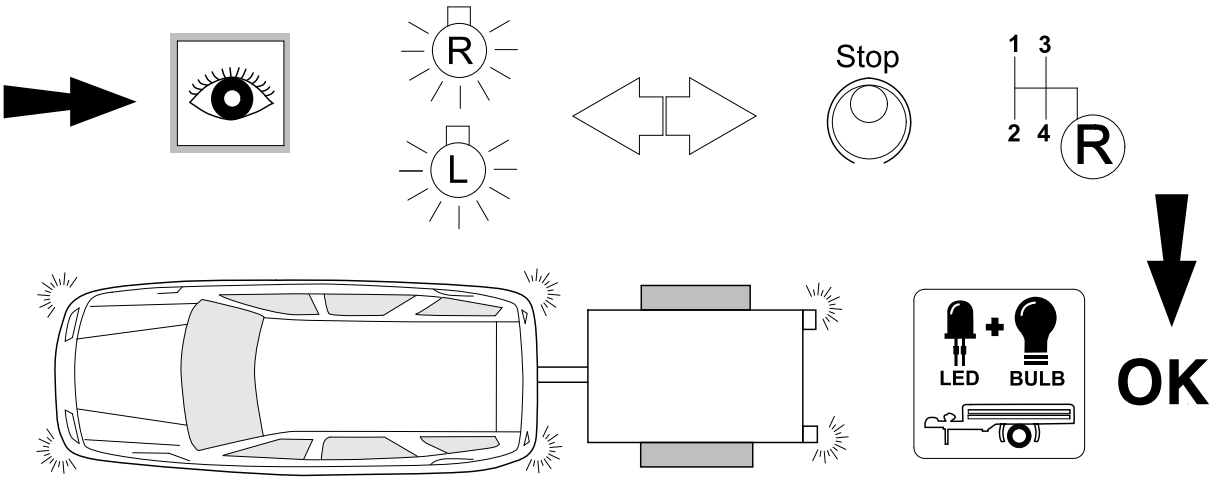

38

Bulb out condition indicated
with sound from modul speaker

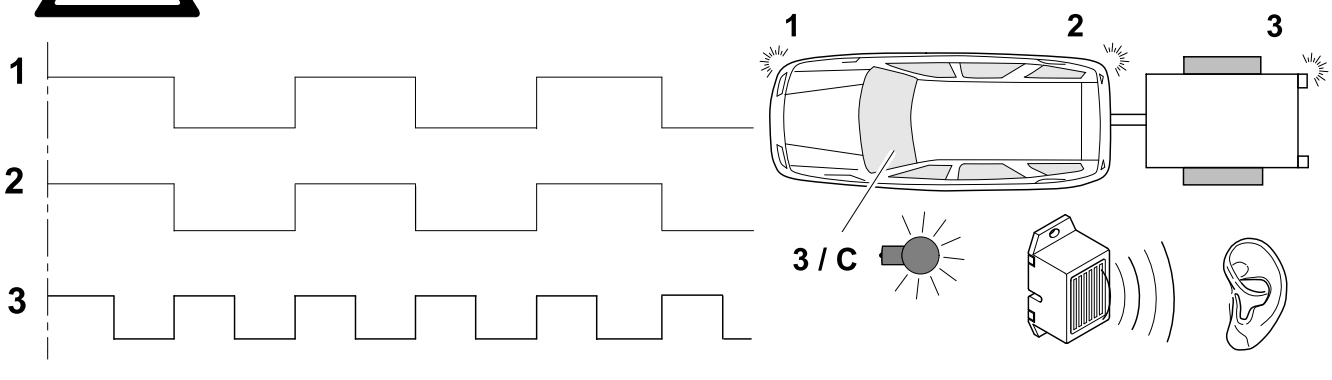

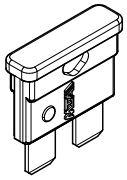

20 A

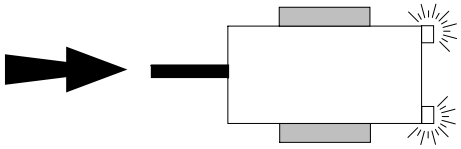

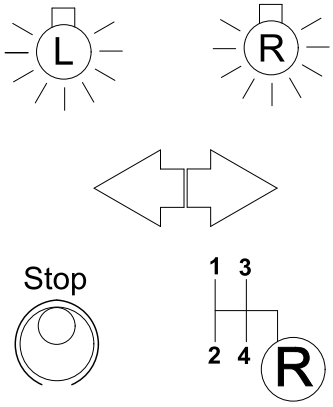

40

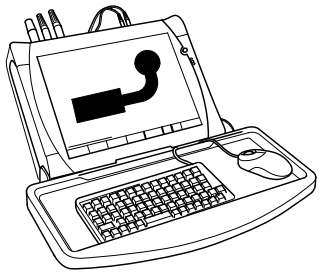

With vehicle coding

38 ⇨ 40

TSP
Trailer
Stability
Program

! Attension !

These codings may be lost

after visiting an authorized workshop!

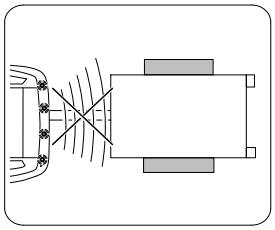

P

Trailer
Assistent

OPTION vehicle coding

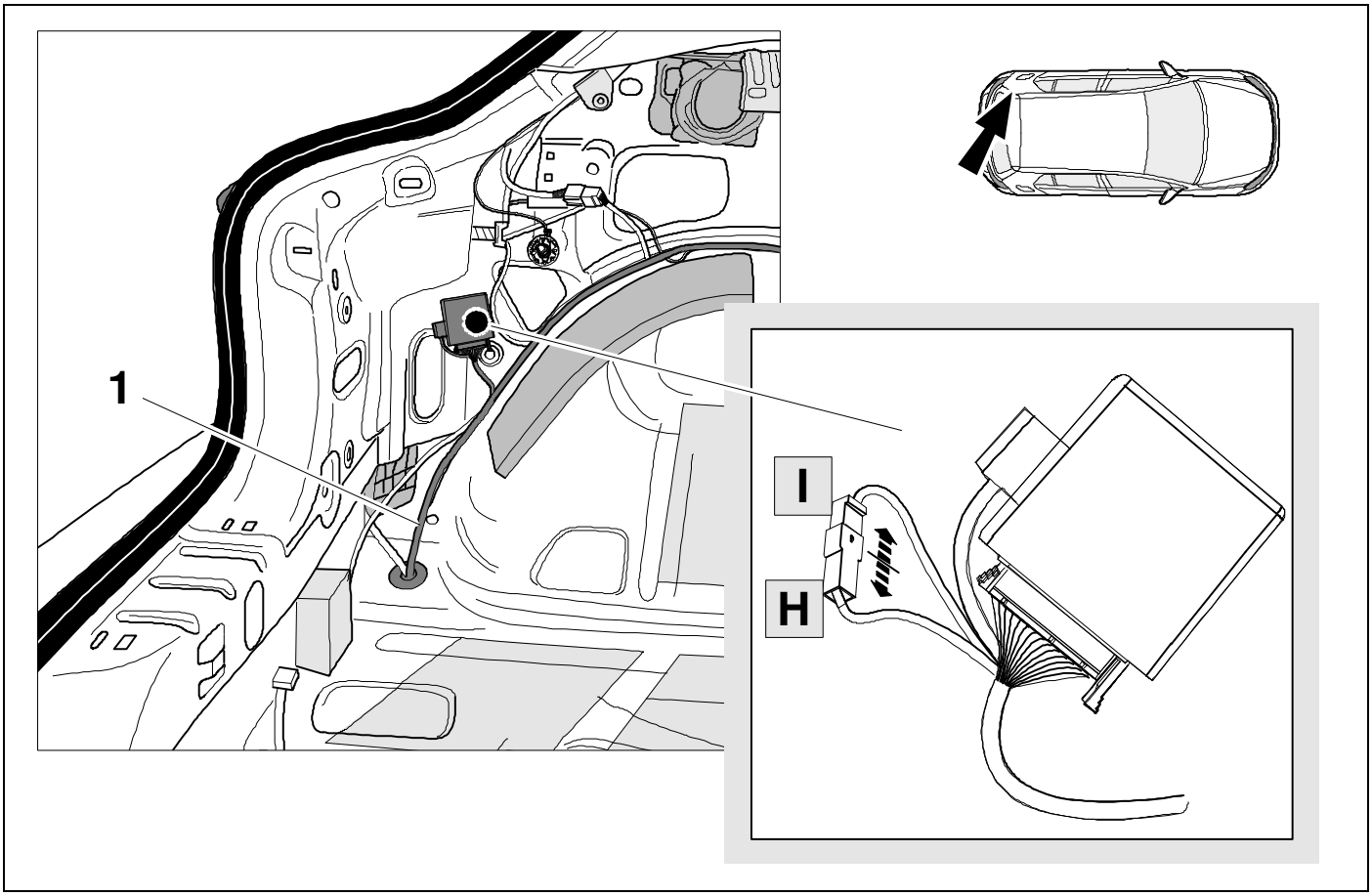

Vehicle coding

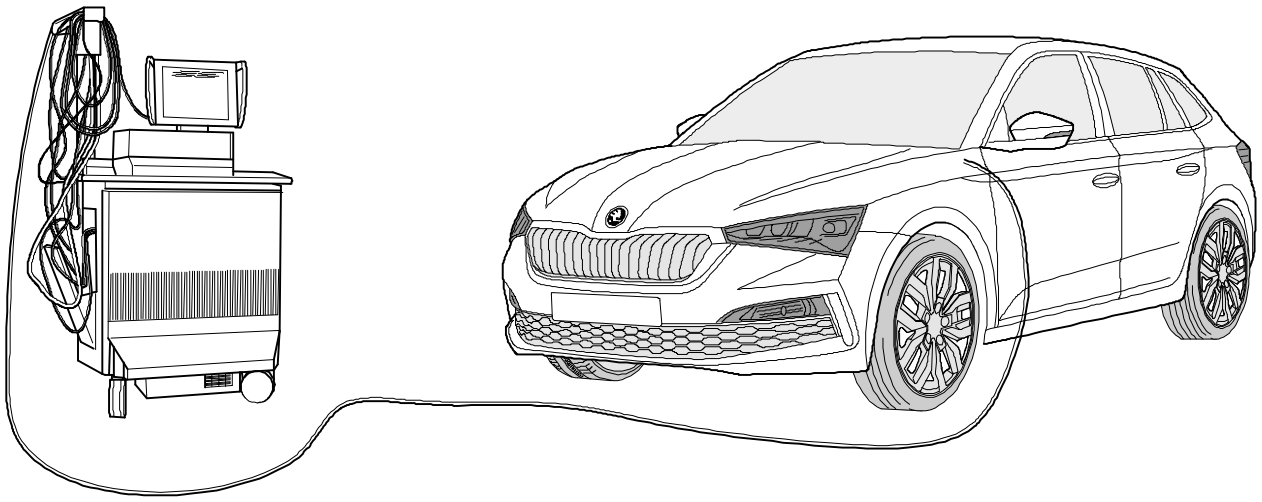

GB

Coding with VCDS, please note:

The procedure described below for encoding and enabling the trailer mode only serves for a general orientation and can vary greatly depending on the model (motorisation / equipment). If necessary less or further control units will have to be adapted.

- **After connecting to VCDS, the "69 trailer function" controller** has to be set to encoded **in the _19 installation list.**
- **Coding EZE_09**
  (electronic central electric controller; Login 31347)
  Diagnosis / Networking plan / Controller self-diagnosis encode hitch_ecu > installed
  Vehicles from (MJ 2017>>) adjustment > channel
  -integration trailer control unit > installed
- **Coding ZKS_46 (Central module convenience system)**
  trailer monitoring > put on active trailer control unit > installed
- **Coding_03 (Brake Electronics; Login 61378)**
  Adjustment > channel - trailer stabilization,
  change value to > active
- **Encoding SWA_3C (Lane Change Assist)**
  ECU for draw bar > with ECU for draw bar
- **Encoding SCH_ 17 (Dash panel insert)**
  Trailer > yes
- **Encoding RFK_6C (reverse camera system)**
  equipment_ahk > installed
- **Encoding STF_74 (chassis control system)**
  Trailer > installed
- **Encoding EPH_76 (PDC controller)**
  Trailer > trailer device can be removed manually
- **Encoding DiS_13 (controler distance control,**
  possible Login 20103)
  Control module for towing sens > installed or
  Control module for trailer recognition > installed
  (Byte 03 Bit 03)
- **Encoding FFF_A5 (front sensor system controller)**
  AAG > coded
- **Encoding HDE_6D (boot lid electronics controller)**
  Trailer > installed

Important note on encoding and activating in trailer mode

The aforementioned settings are carried out in the vehicle's electrical system and saved locally. During general updates for the vehicle software (for example, within the scope of service or repair work) the settings may be overwritten and deleted under certain circumstances. At this case, the trailer mode activation has to be updated again locally after the update. Diagnostic information relating to the trailer mode that may appear during variance comparisons with the data saved in the manufacturer's works, may form the basis of the local activation

43 CHECK BULB OUT DETECTION

BULB OUT CONDITION INDICATED WITH
INCREASED INDICATOR FREQUENCY

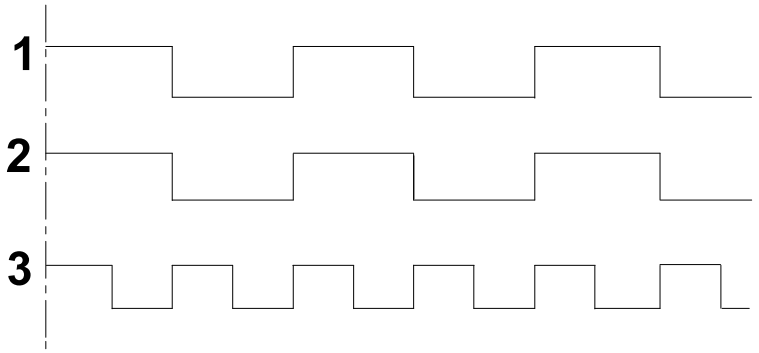

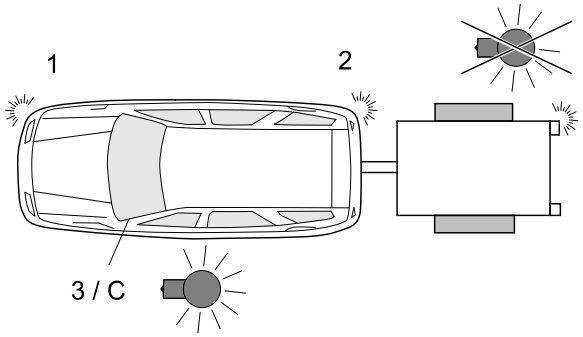

44

Operation support

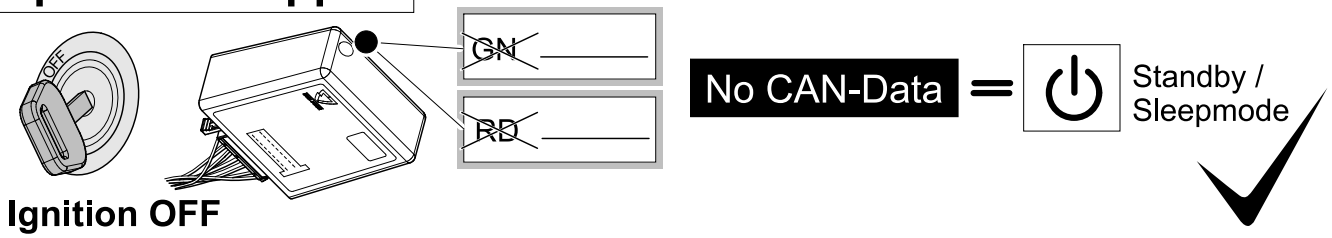

Ignition OFF

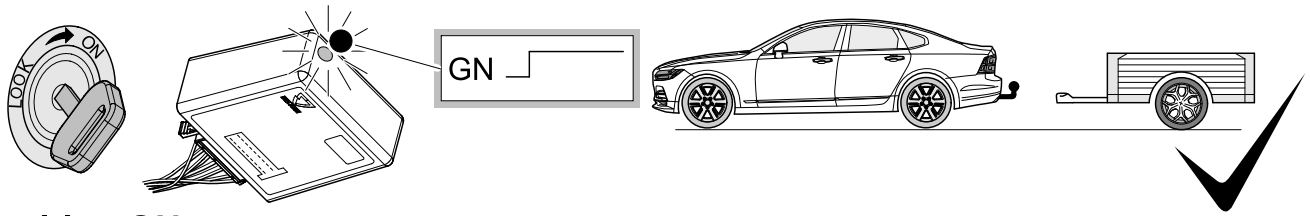

Ignition ON

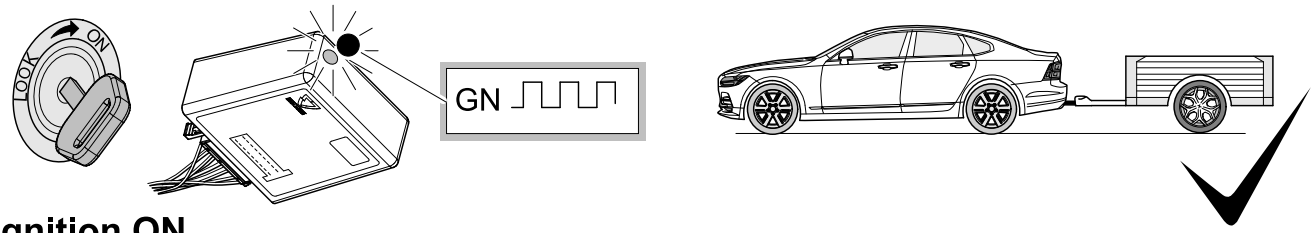

Ignition ON

Failure support

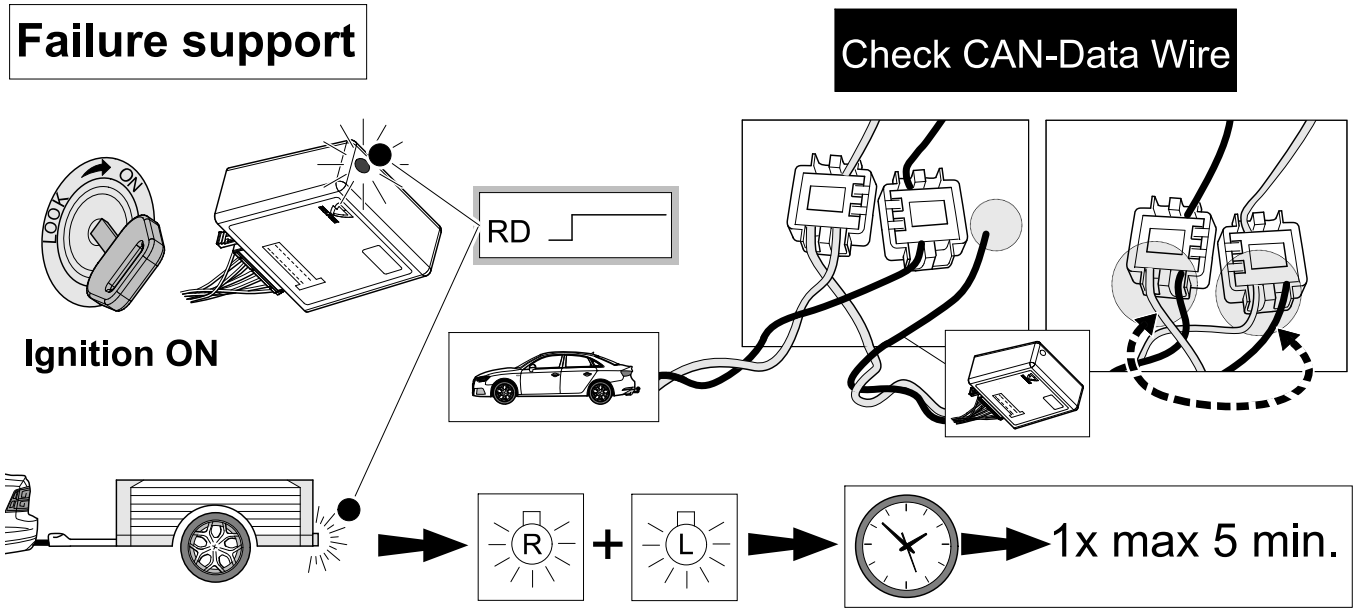

Ignition ON

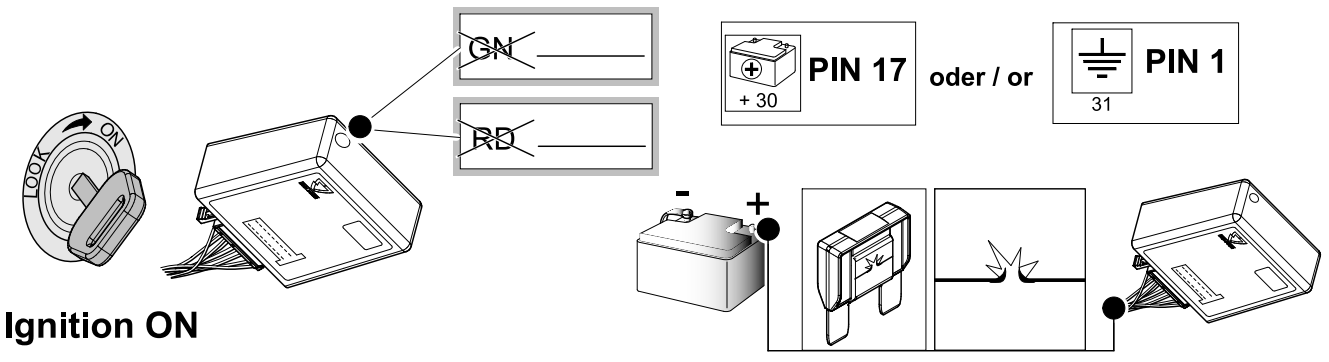

Ignition ON

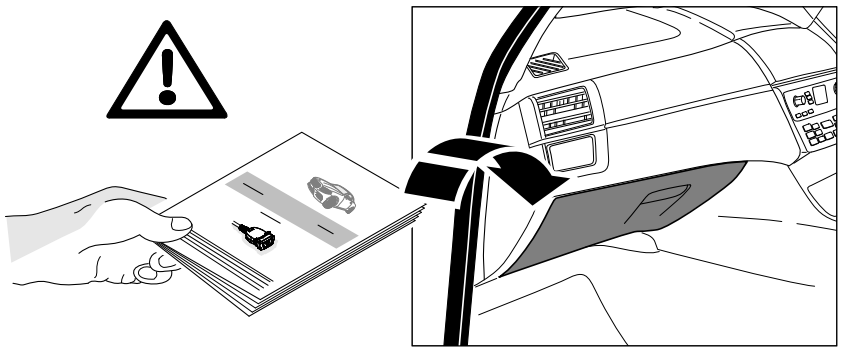

GB

Subject to change in terms of construction, equipment and colour, and may contain errors.
The information and illustrations are non-binding.