# Installation instructions

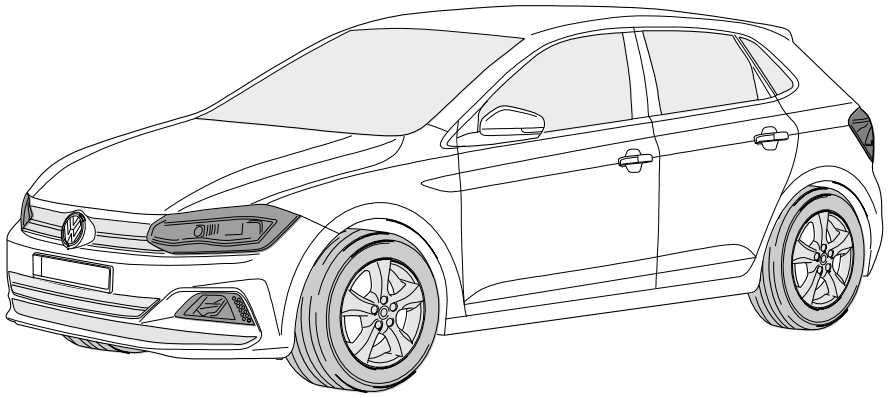

# 750071EJ

## VOLKSWAGEN POLO 10/17 >>

SCAN FOR
LATEST
INSTRUCTIONS

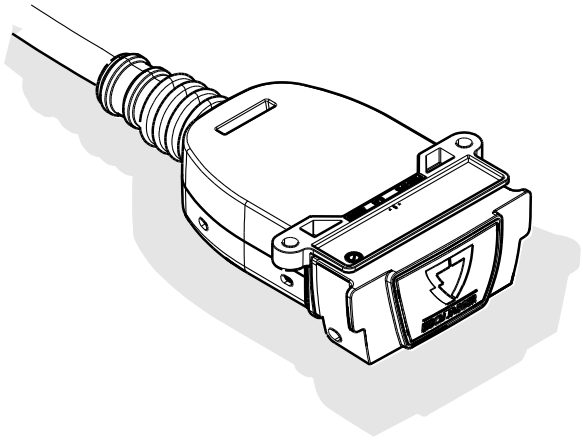

Jaeger FLEX 2in1

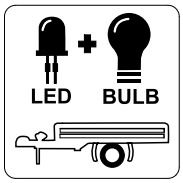

### Reference:

The following information must be reviewed before beginning the assembly:

The installation instructions are to be thoroughly read.
The installation should be carried out by qualified personnel with the relevant technical knowledge. The vehicle manufacturers' current technical notices and information on retrofitting must be followed. The removal and replacement instructions found in the current repair manuals must be followed.
It must be ensured that the vehicle is technically suitable for the installation of a trailer hitch.

# OVERVIEW

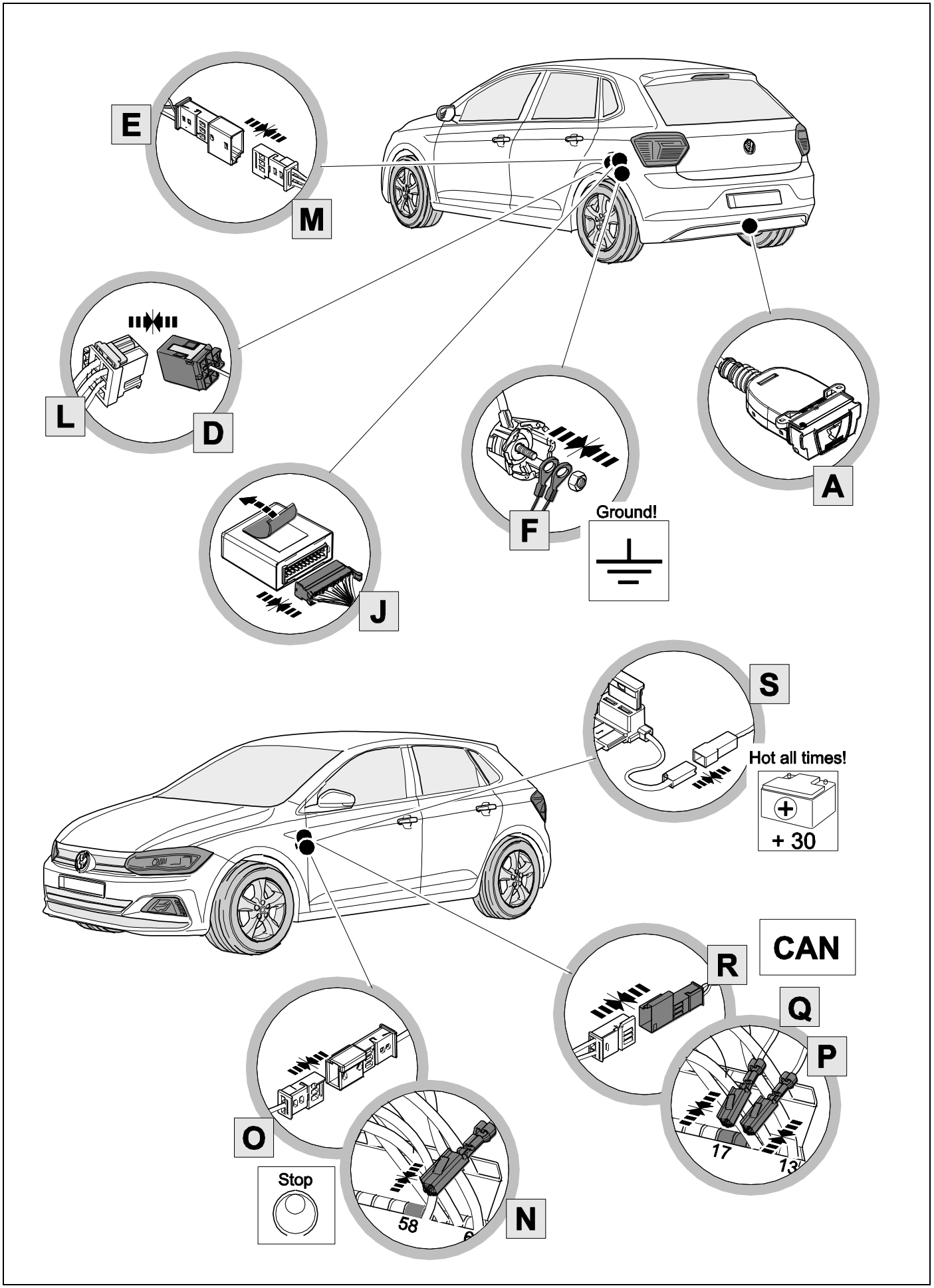

# KIT

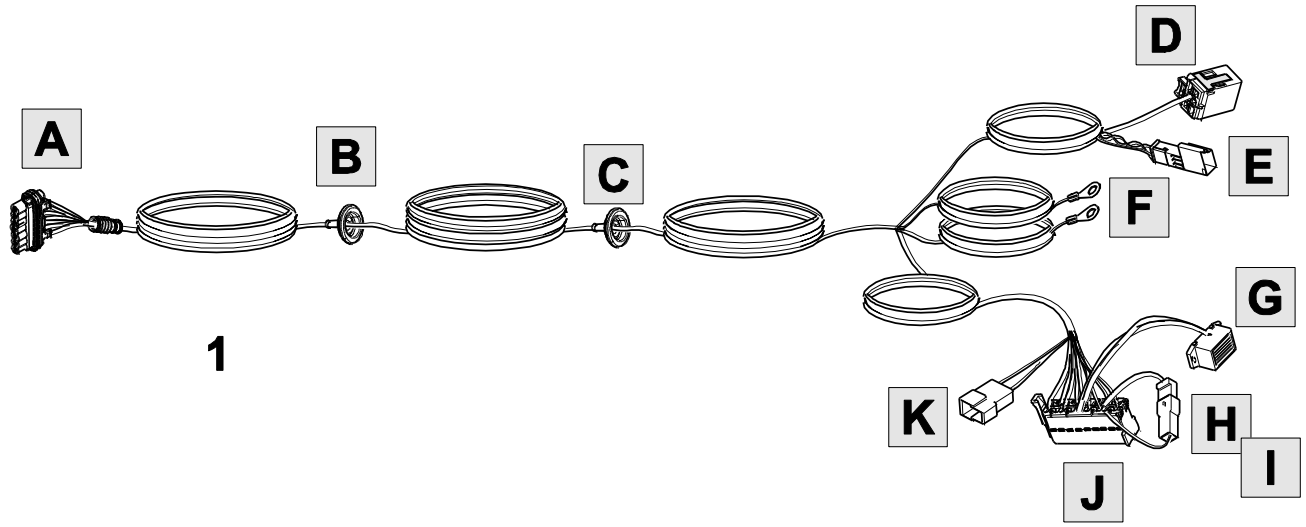
A
B
C
D
E
F
G
H
I
J
K
1

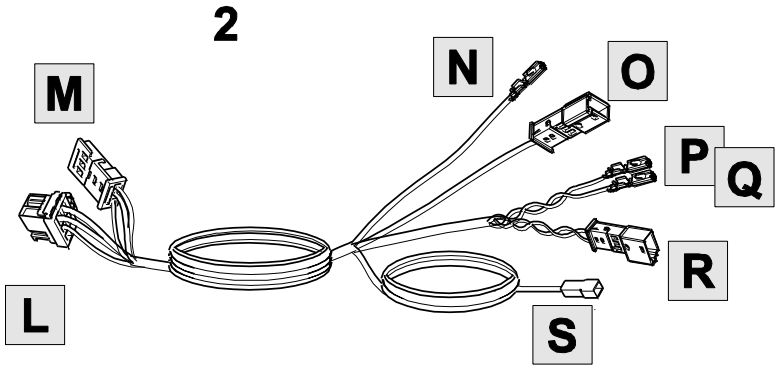
2
L
M
N
O
P
Q
R
S

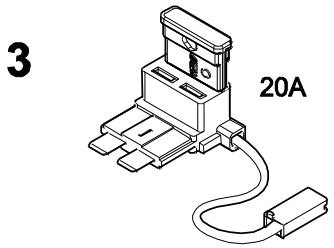
3
20A

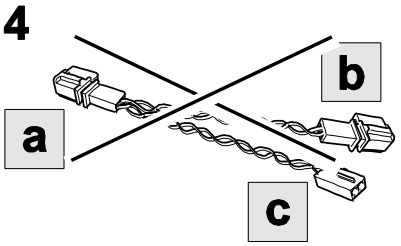
4
a
b
c

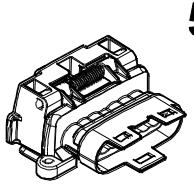
5

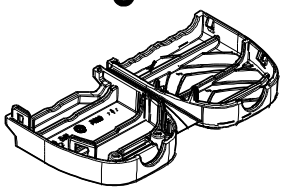
6

7

8
2x

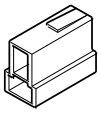
9

10

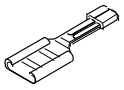
11

12
Service
2x

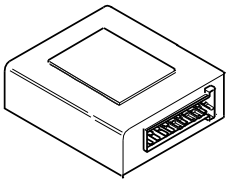
13

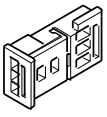
14
bk

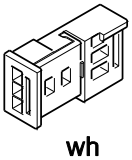
15
wh

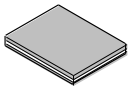
16

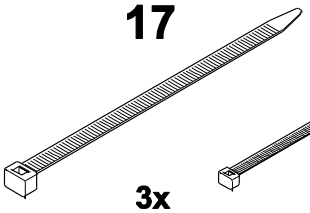
17
3x

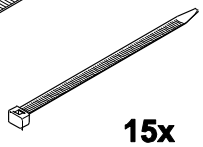
18
15x

19
2x

20
2x

# TOOLS

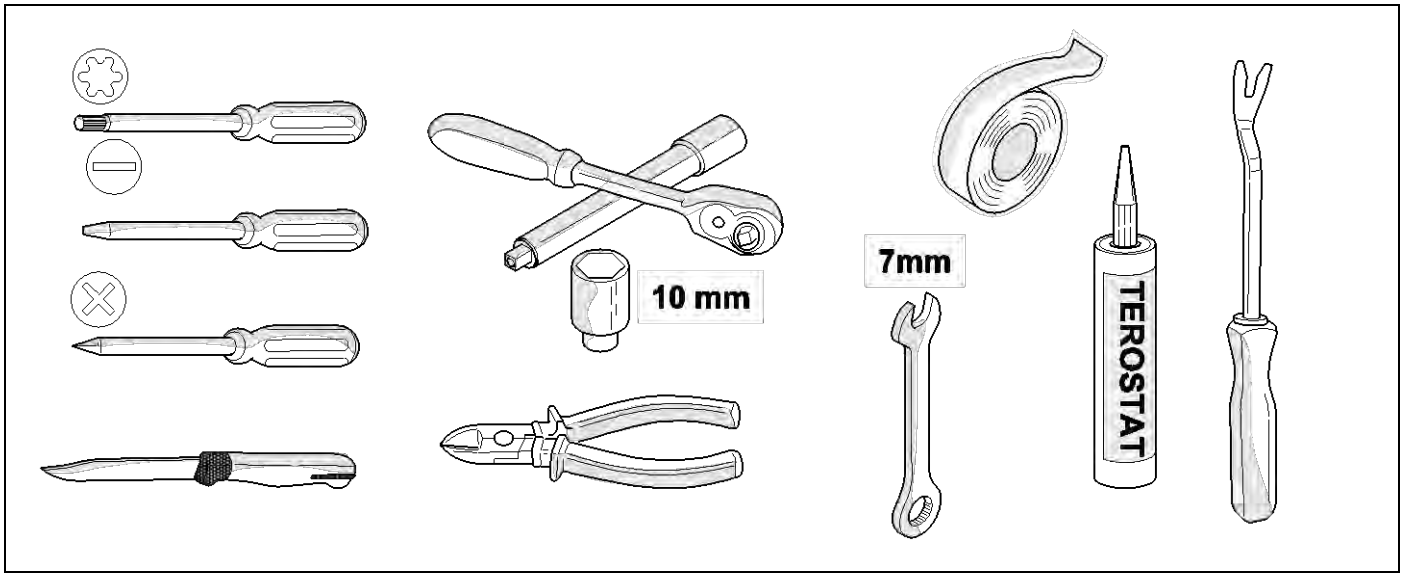


**1**

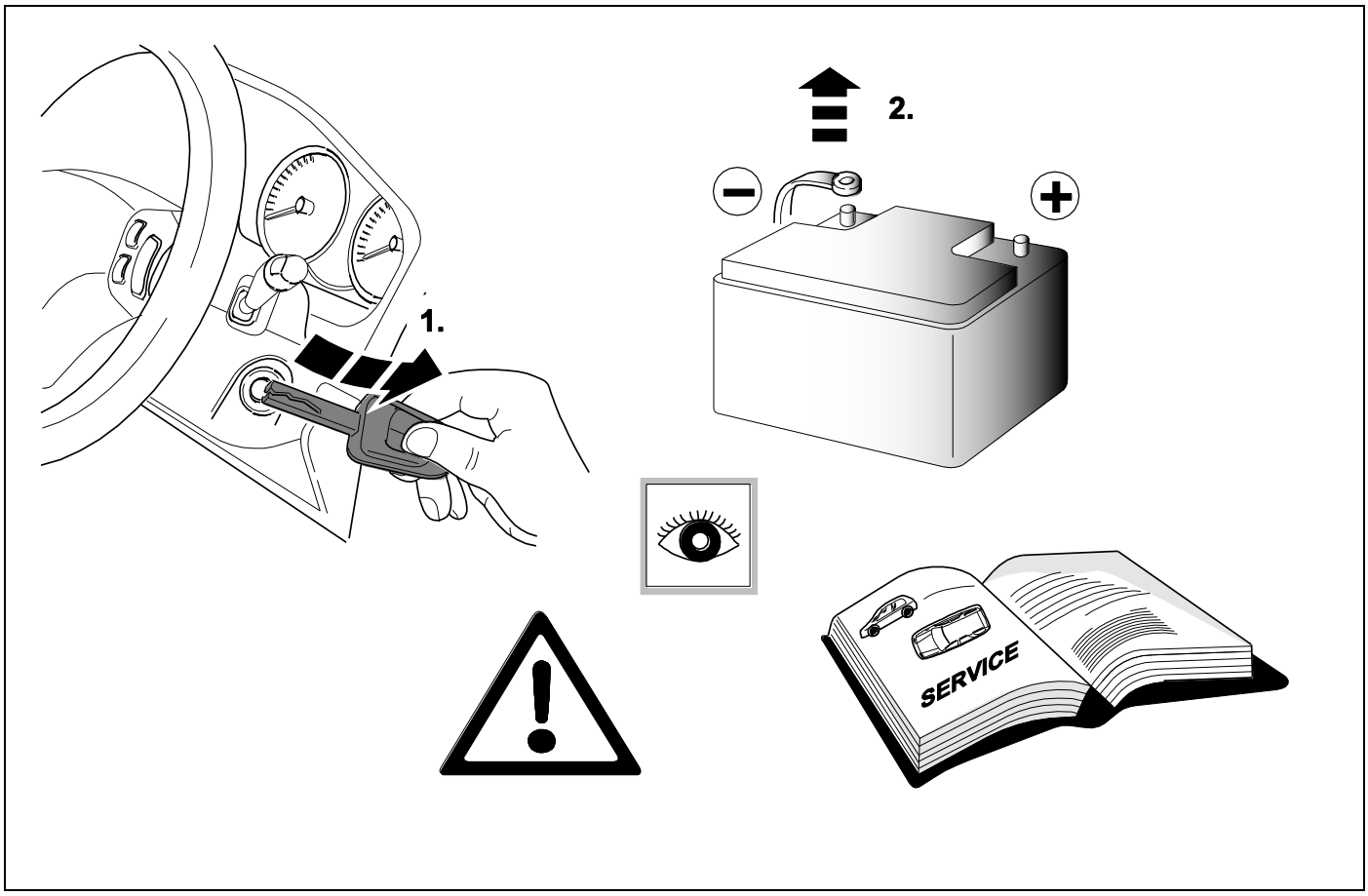

**2**

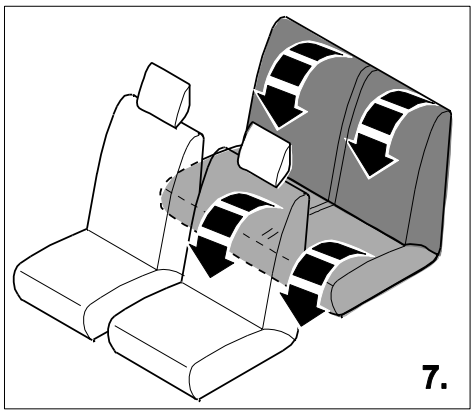


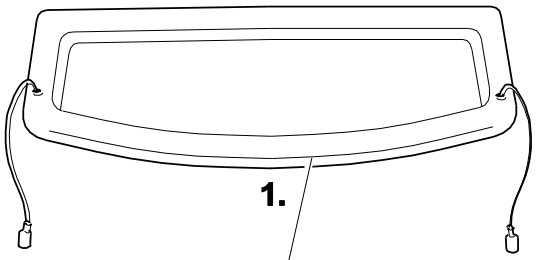


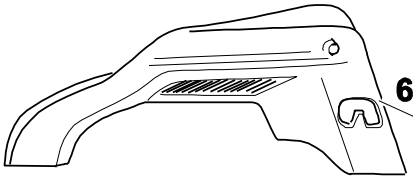


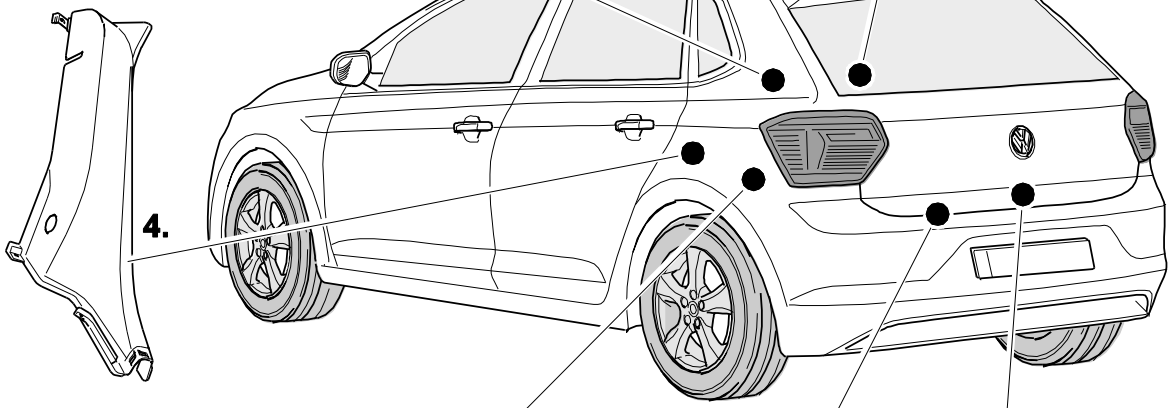


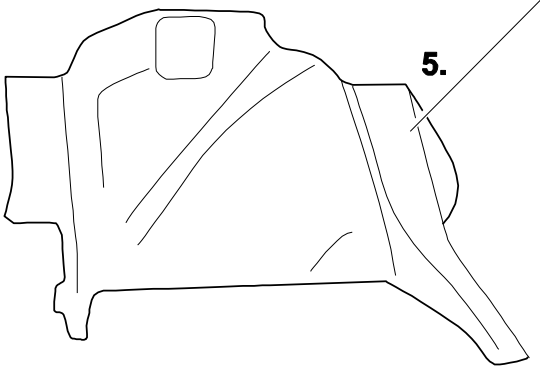


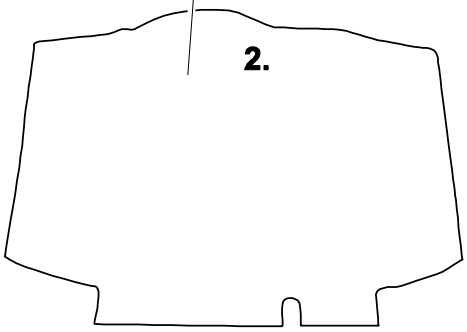


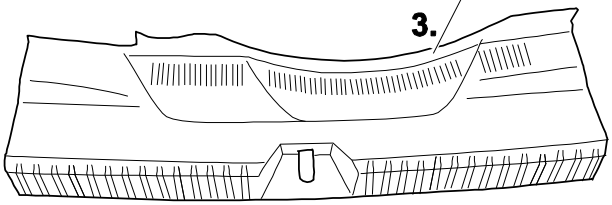


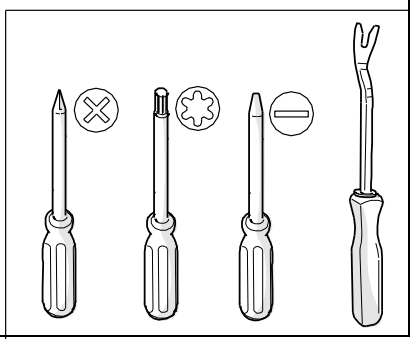

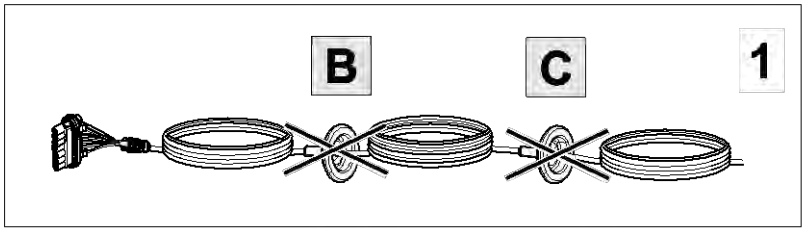
B
C
1

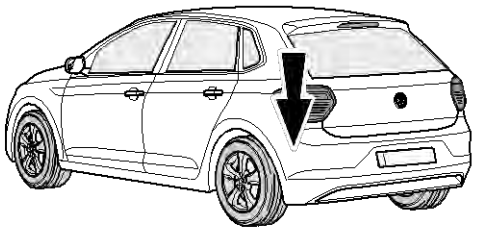

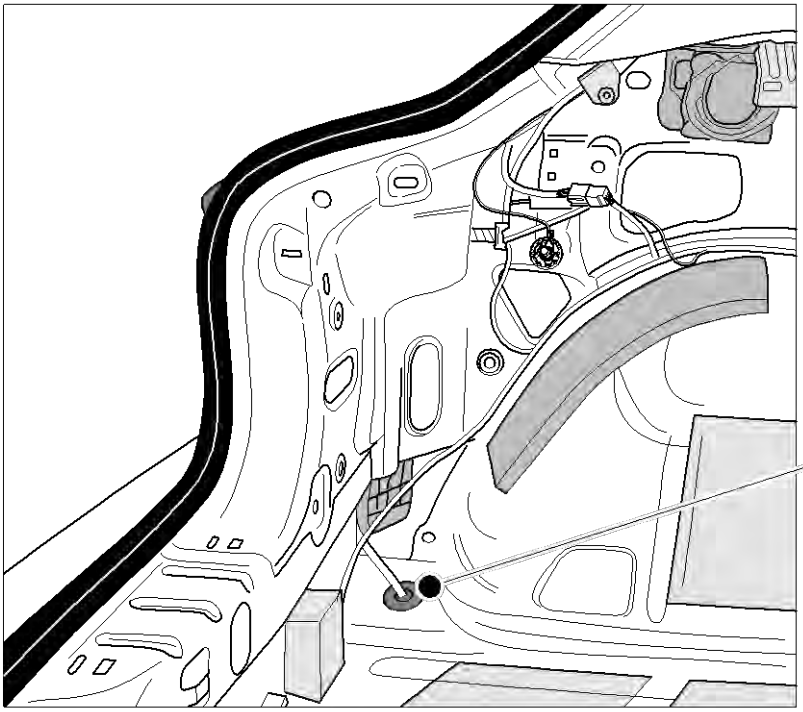

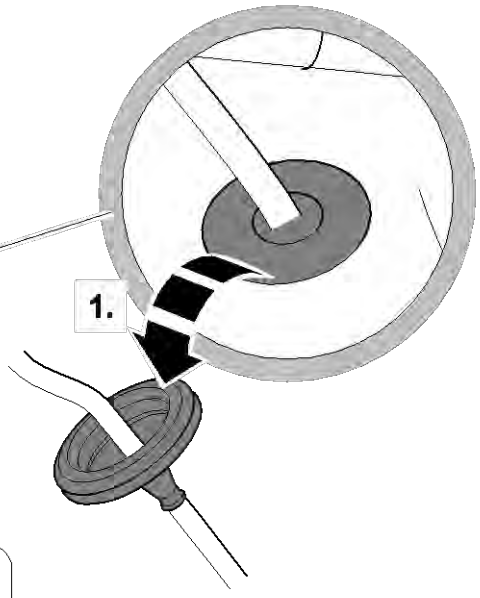
1.

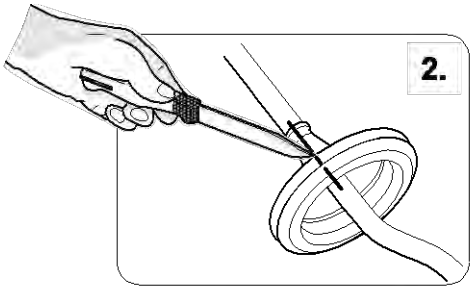
2.

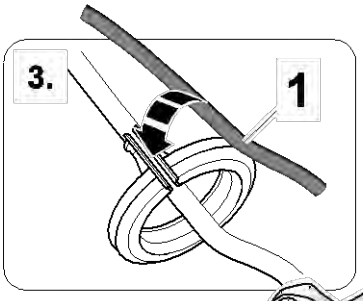
3.
1

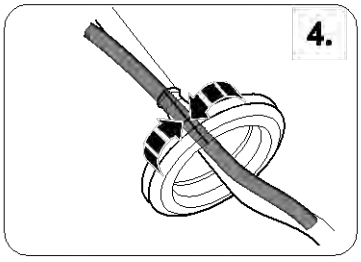
4.

5.
TEROSTAT

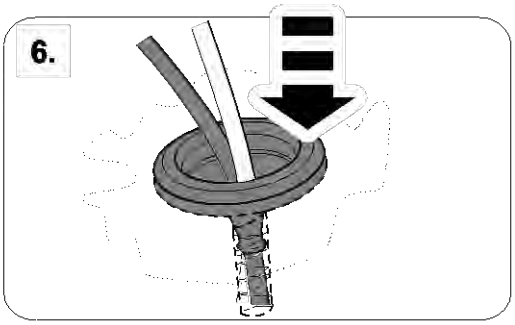
6.

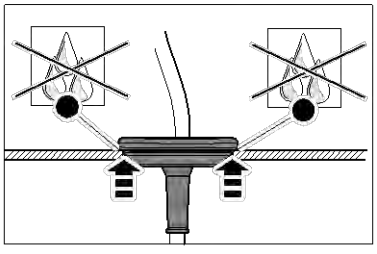

4

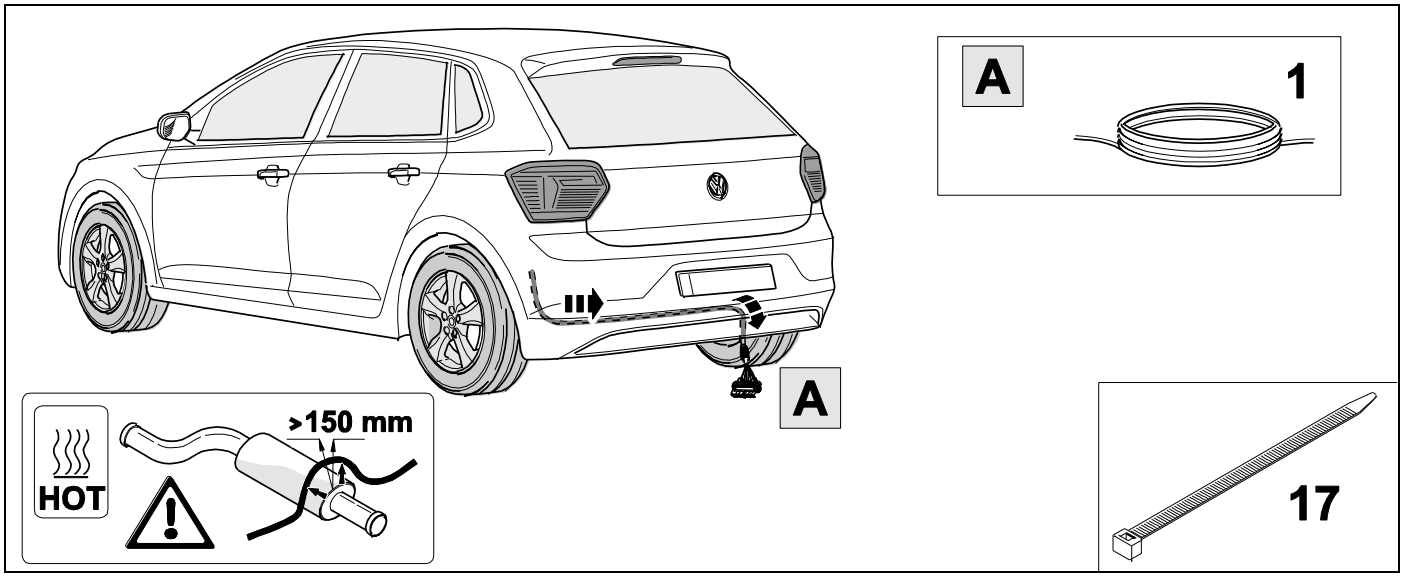
A
1
A
HOT
>150 mm
17

5 ⇨ 8

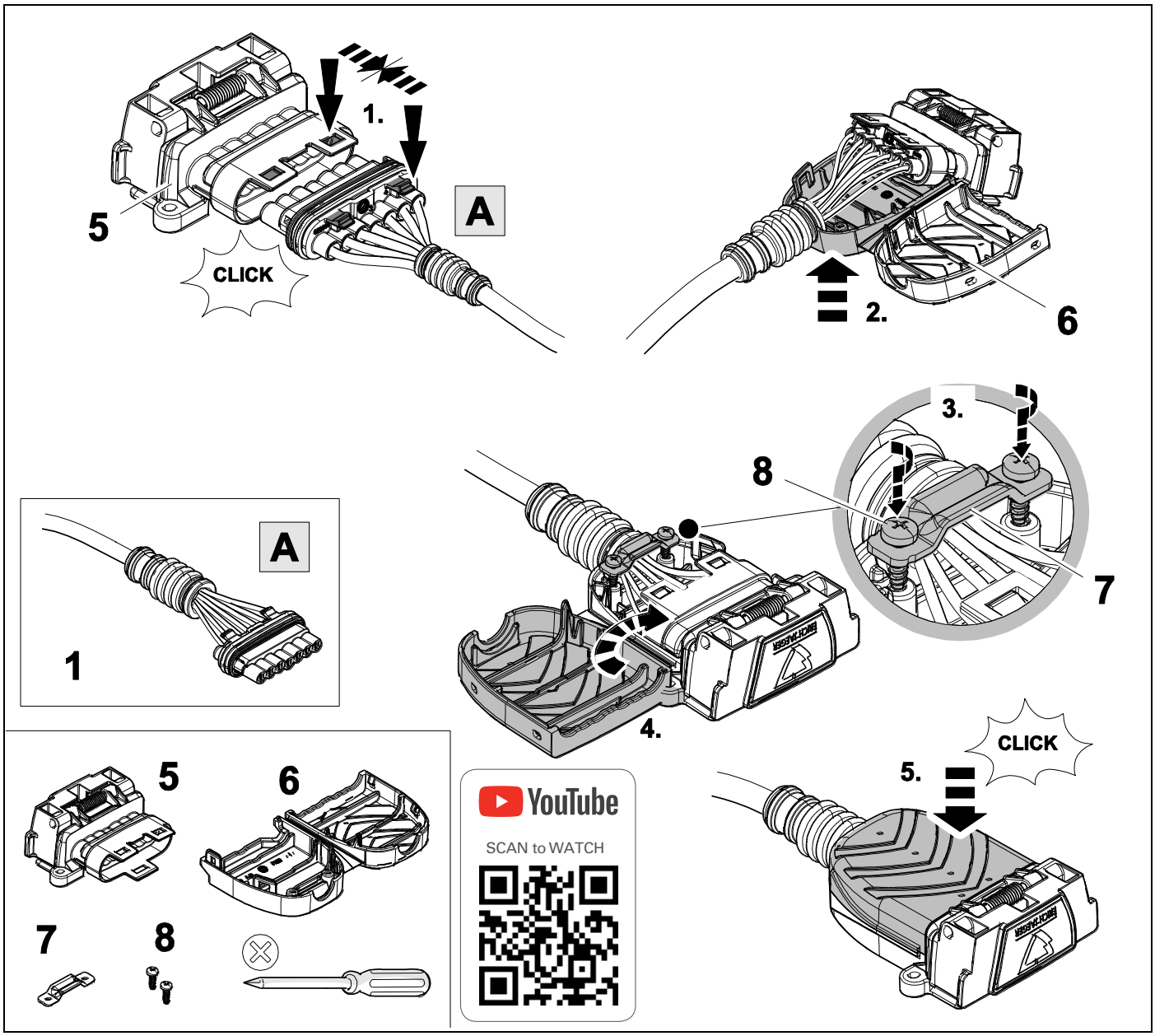
1.
5
A
CLICK
2.
6
3.
8
7
4.
A
1
5
6
7
8
YouTube
SCAN to WATCH
CLICK
5.

**6**

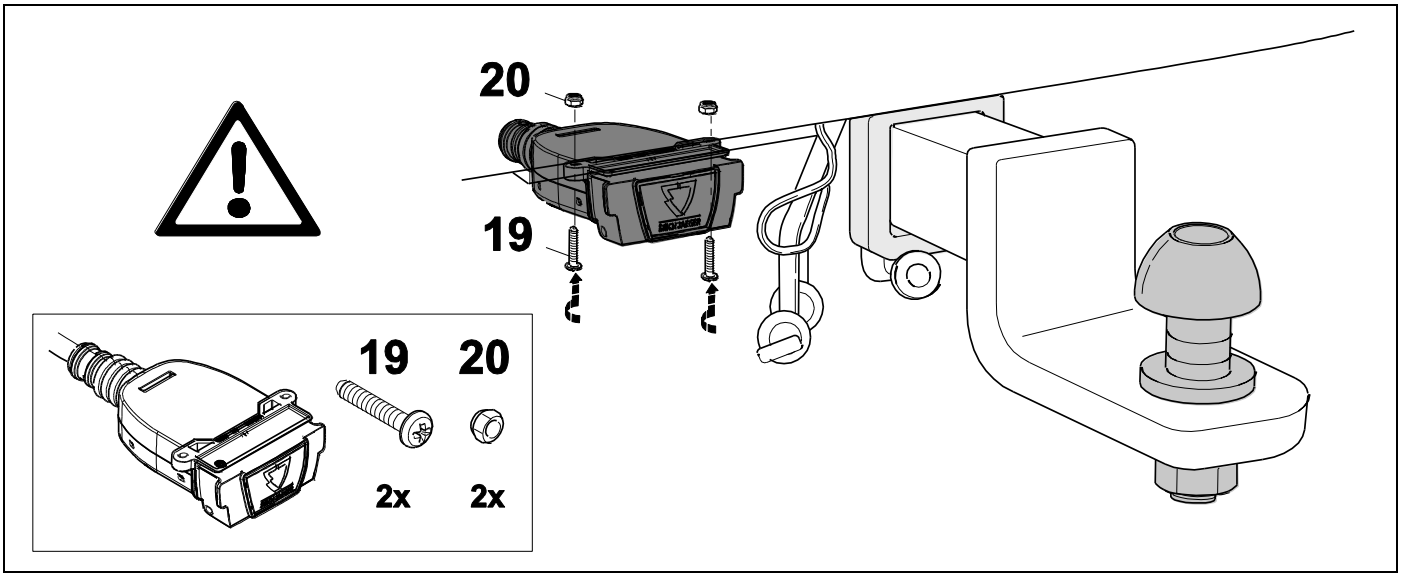


**7** ⇨ **8**

| | | |
|---|---|---|
| **1** | **ye** | |
| **2** | **bk** | |
| **3** | **wh** | |
| **4** | **gn** | |
| **5** | **bu** | |
| **6** | **rd** | |
| **7** | **bn** | |

| **8** | **bk** | **wh** | **gy** | **gn** | **rd** | **bu** | **ye** | **bn** | **pu** | **or** | **no** |
|---|---|---|---|---|---|---|---|---|---|---|---|
| GB | black | white | grey | green | red | blue | yellow | brown | purple | orange | not occupied |

## 9

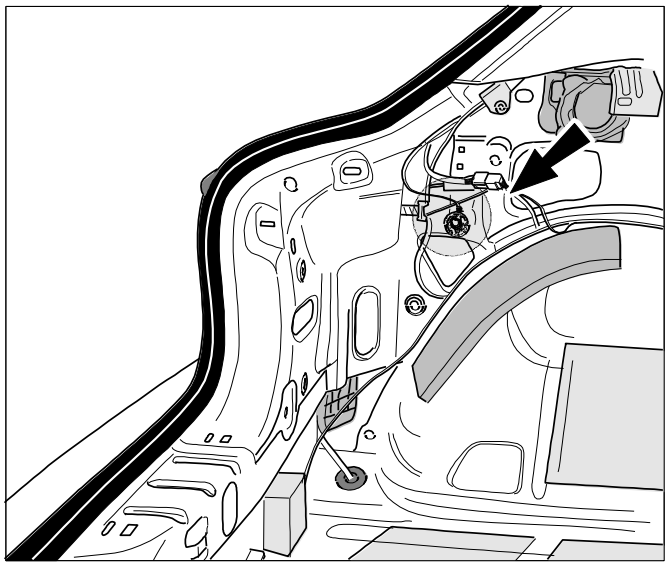

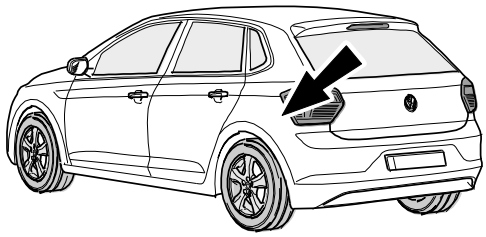

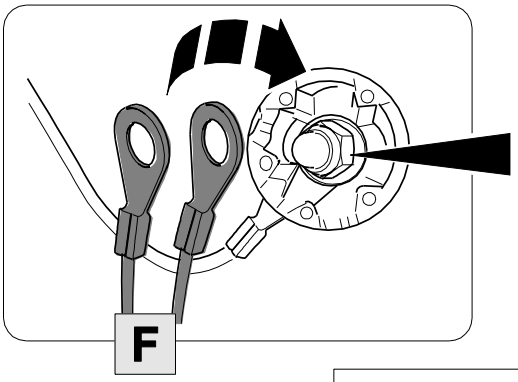


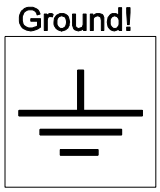


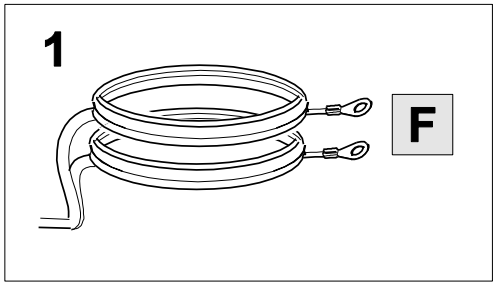


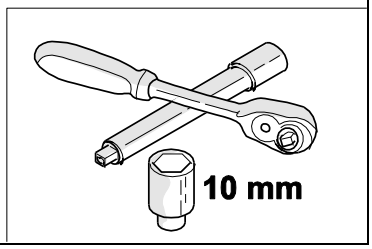


## 10

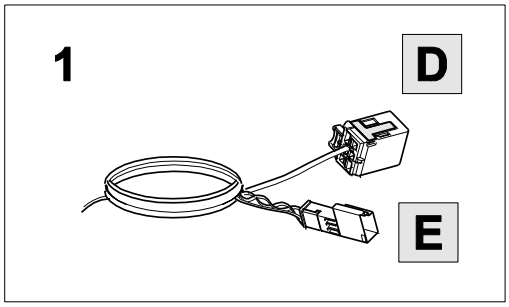


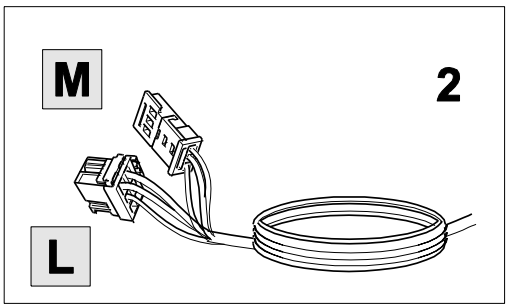

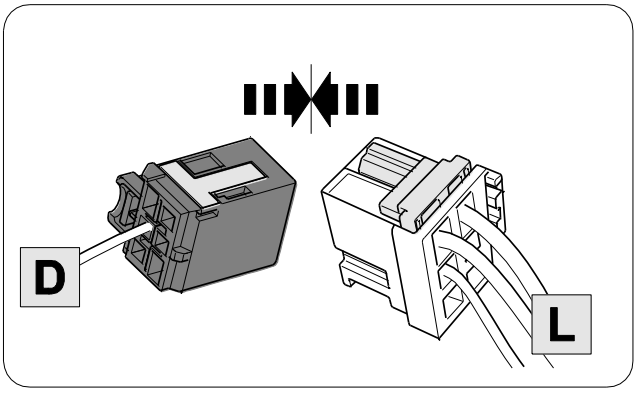


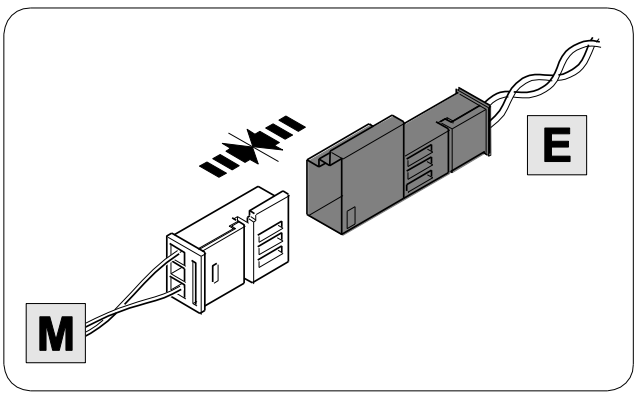

## 11

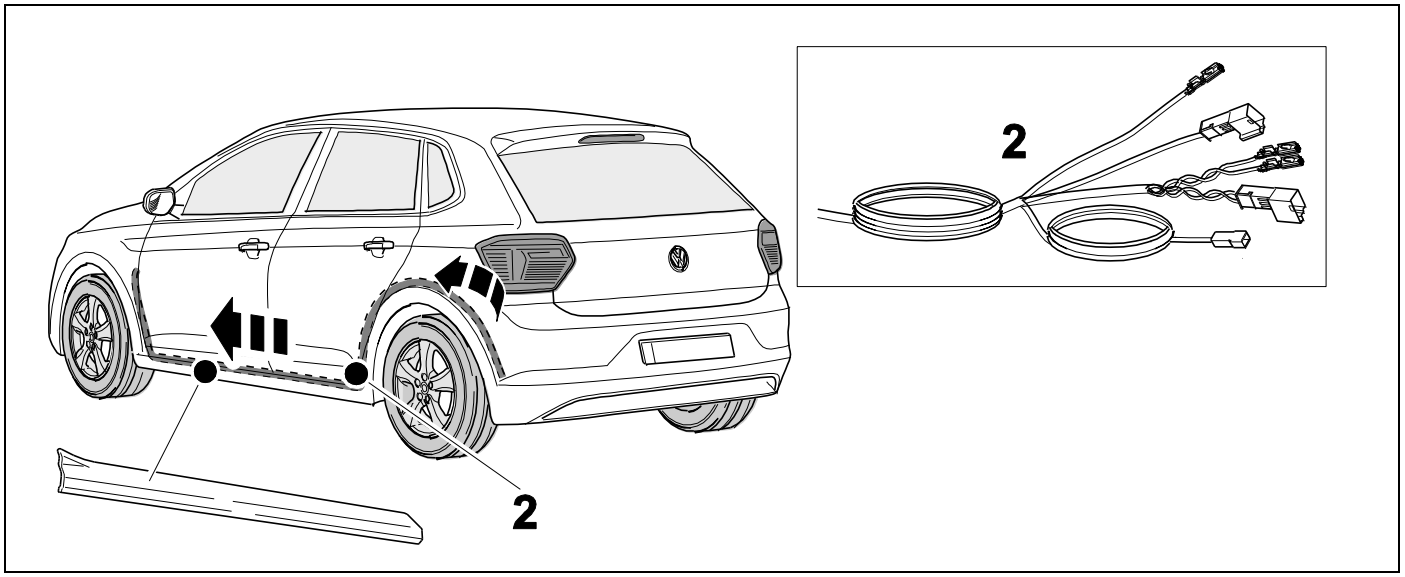


## 12

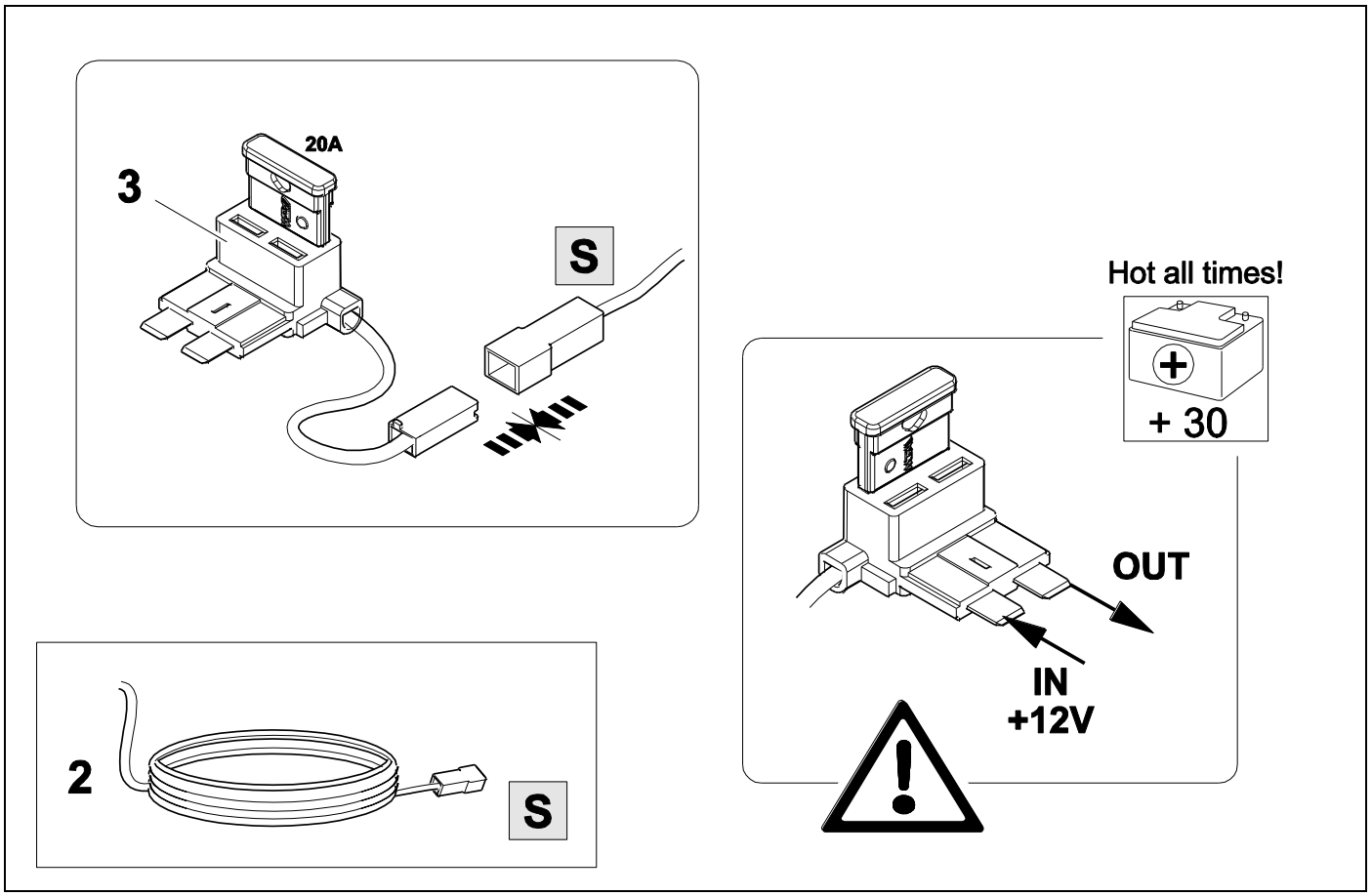

## 13

⇨ 23

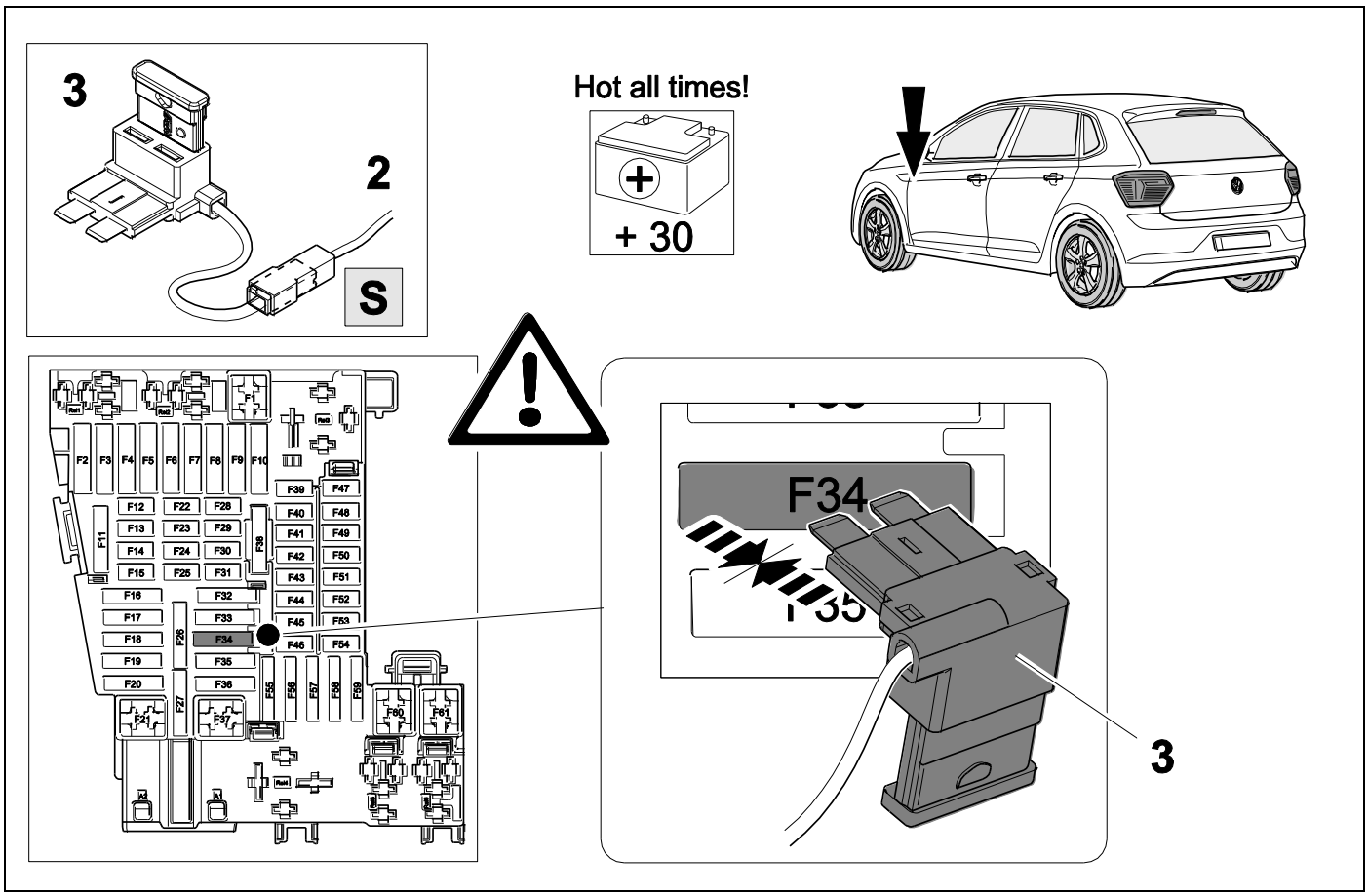


## 14

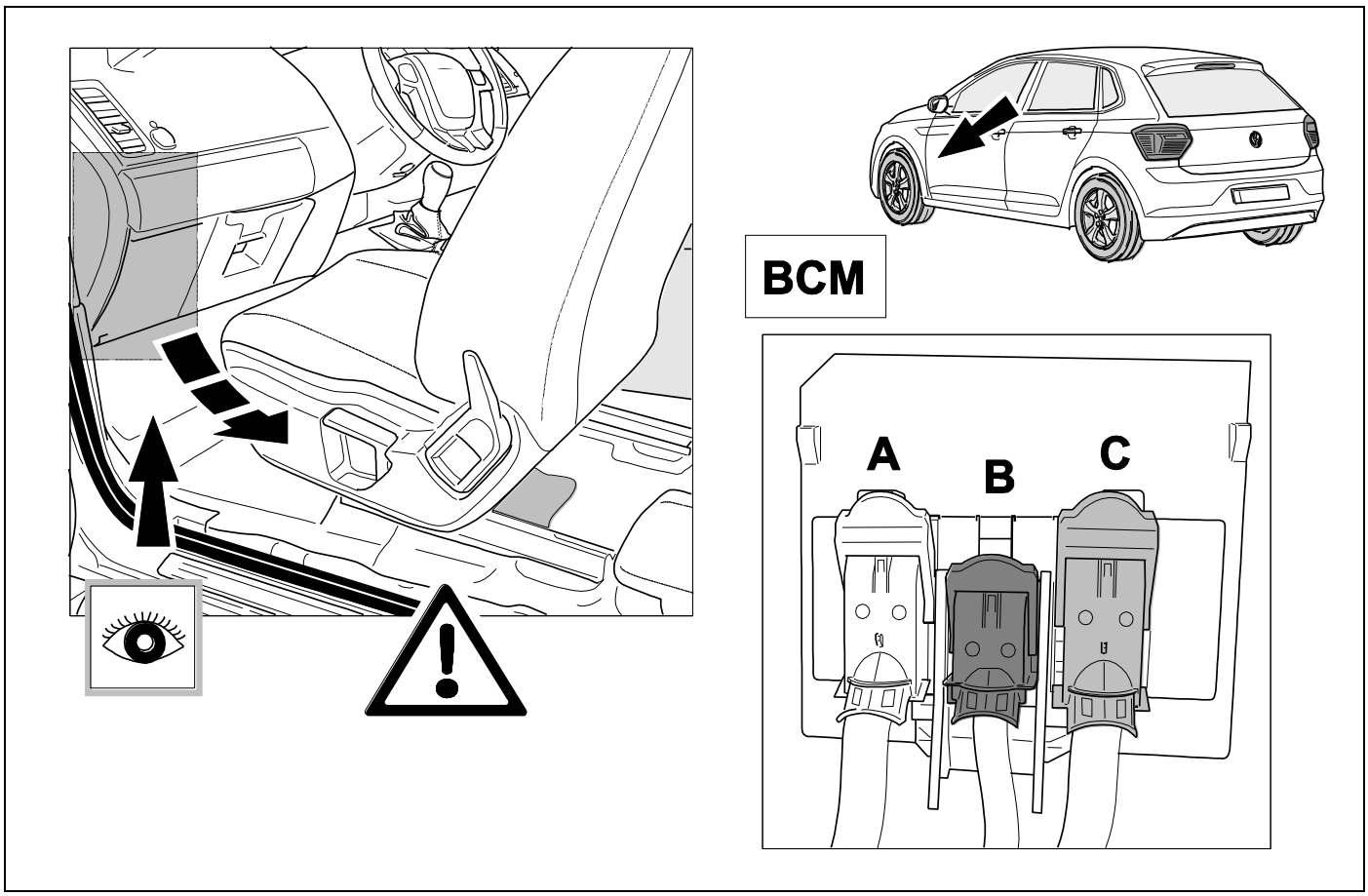

**15** ⇨ **8**

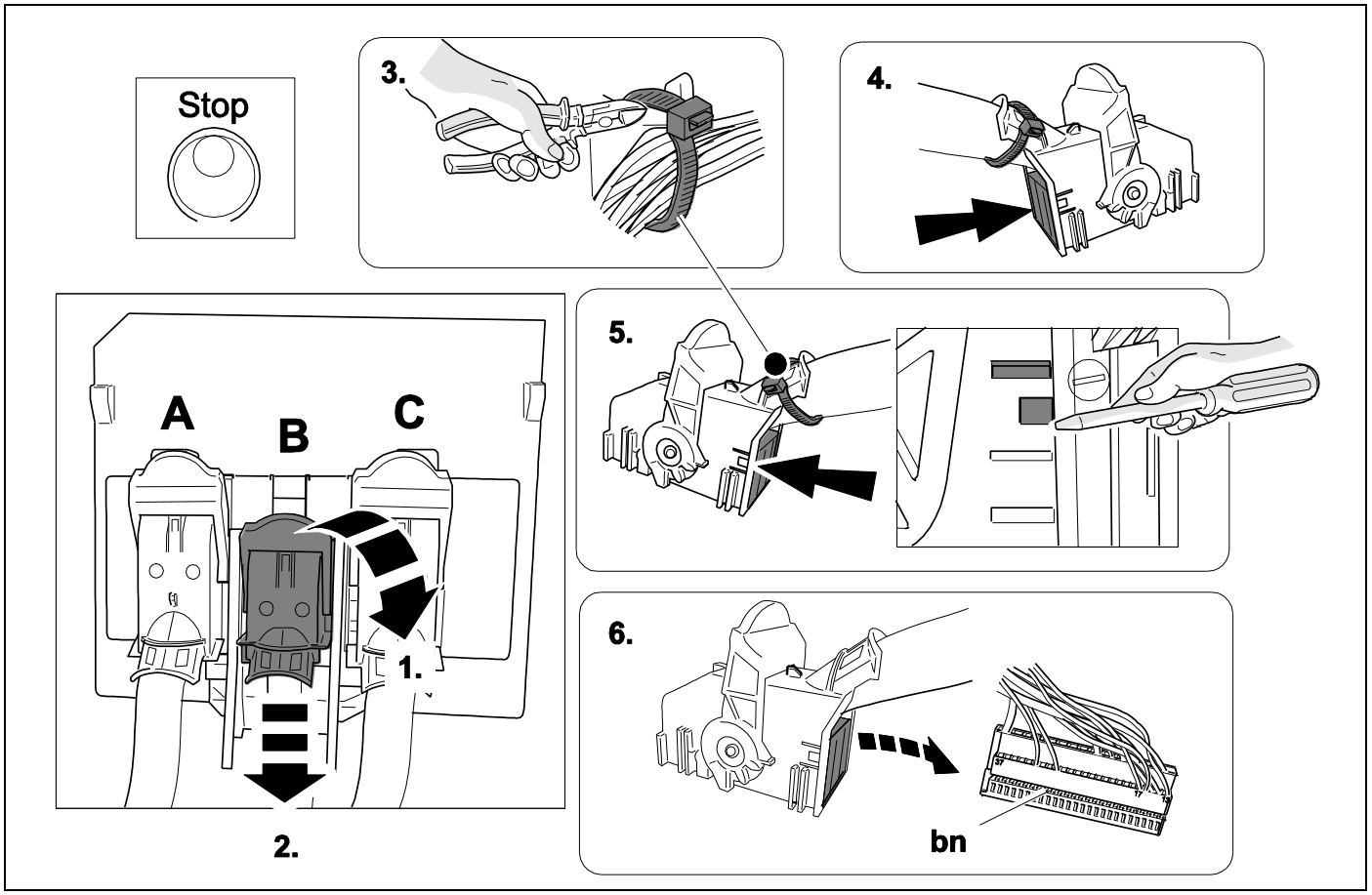
Stop
3.
4.
A
B
C
1.
2.
5.
6.
bn

**16** ⇨ **8**

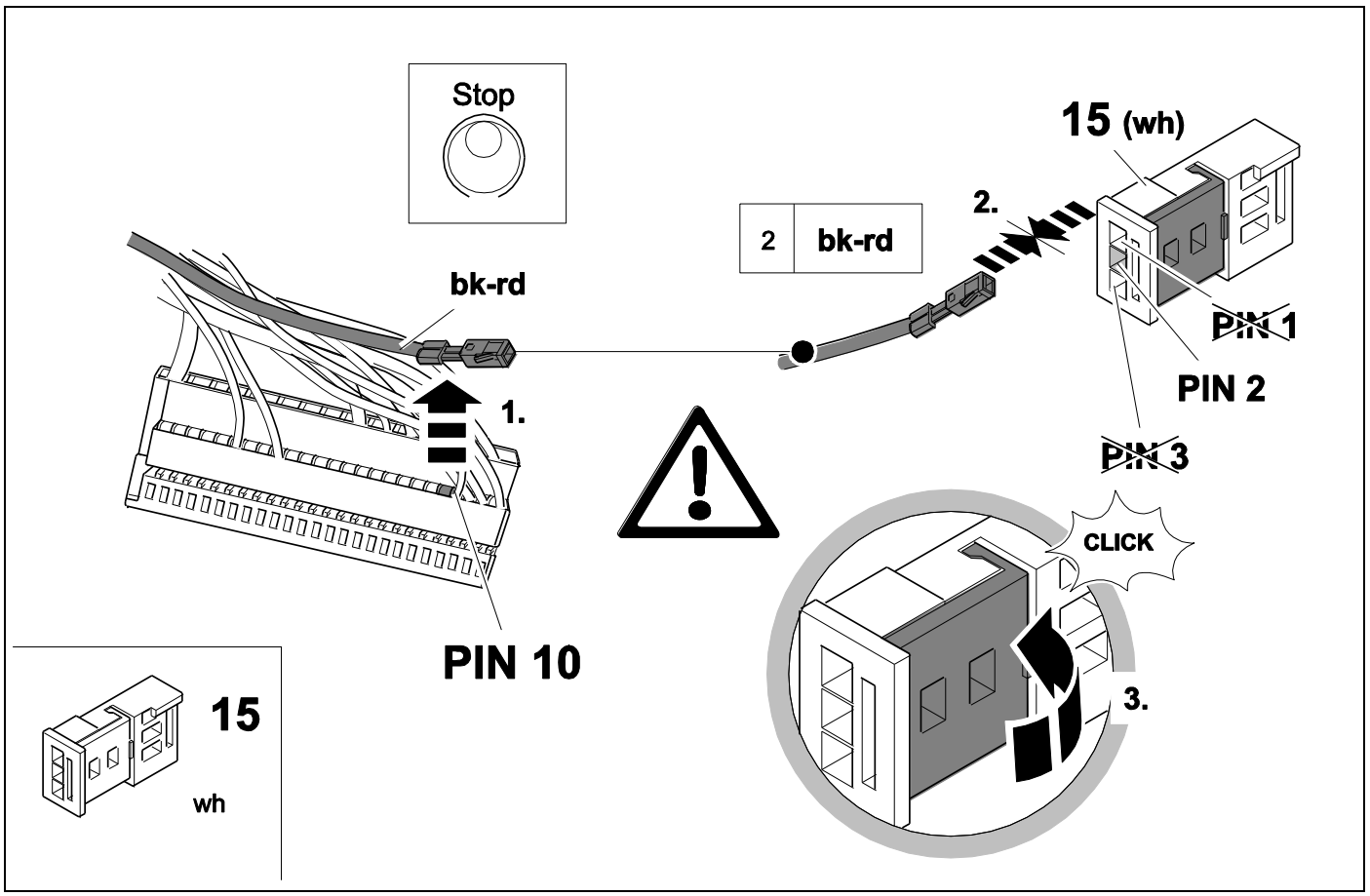
Stop
15 (wh)
2.
2 bk-rd
bk-rd
1.
PIN 1
PIN 2
PIN 3
CLICK
3.
PIN 10
15
wh

## 17

⇨ 8

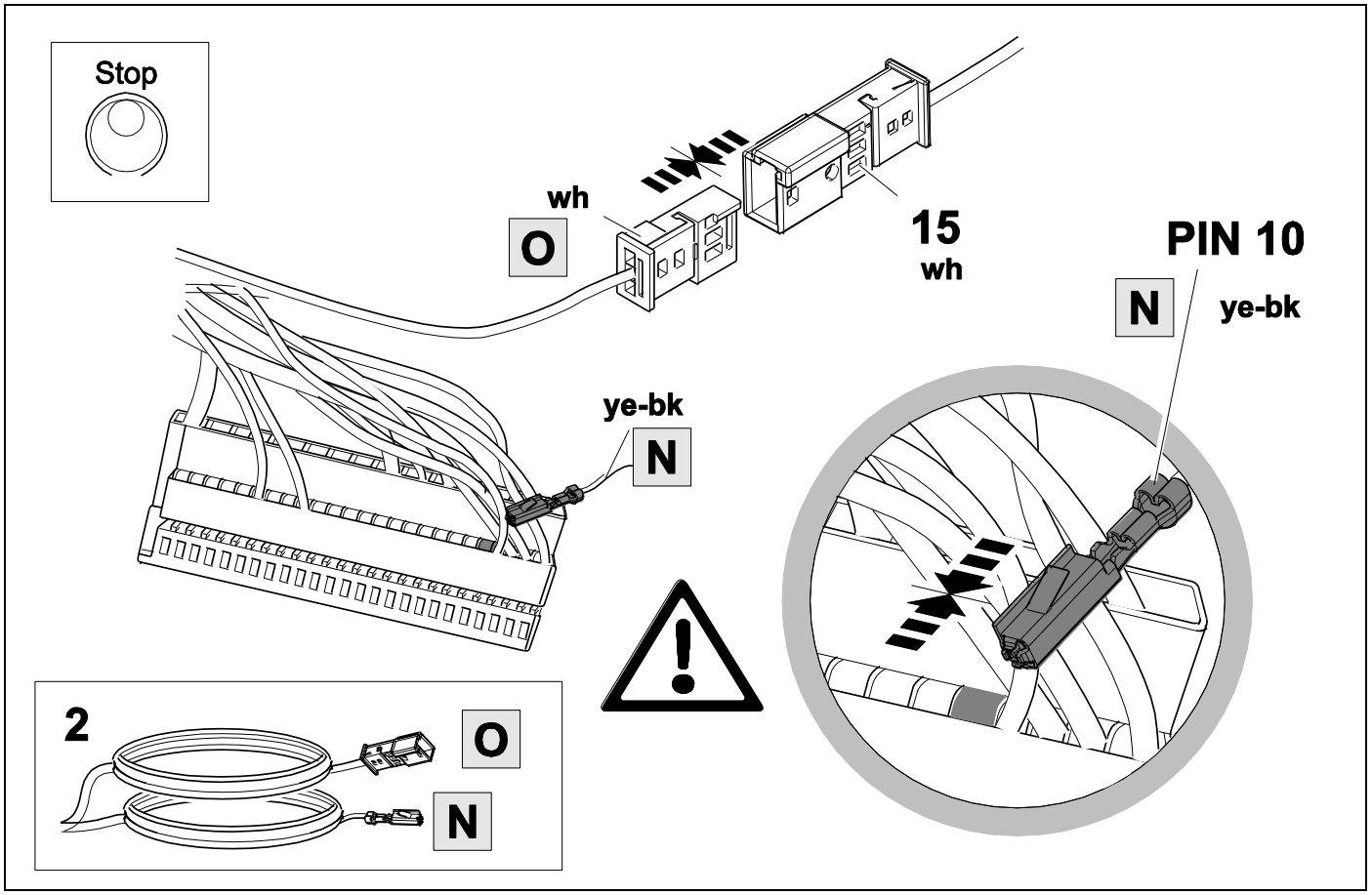


## 18

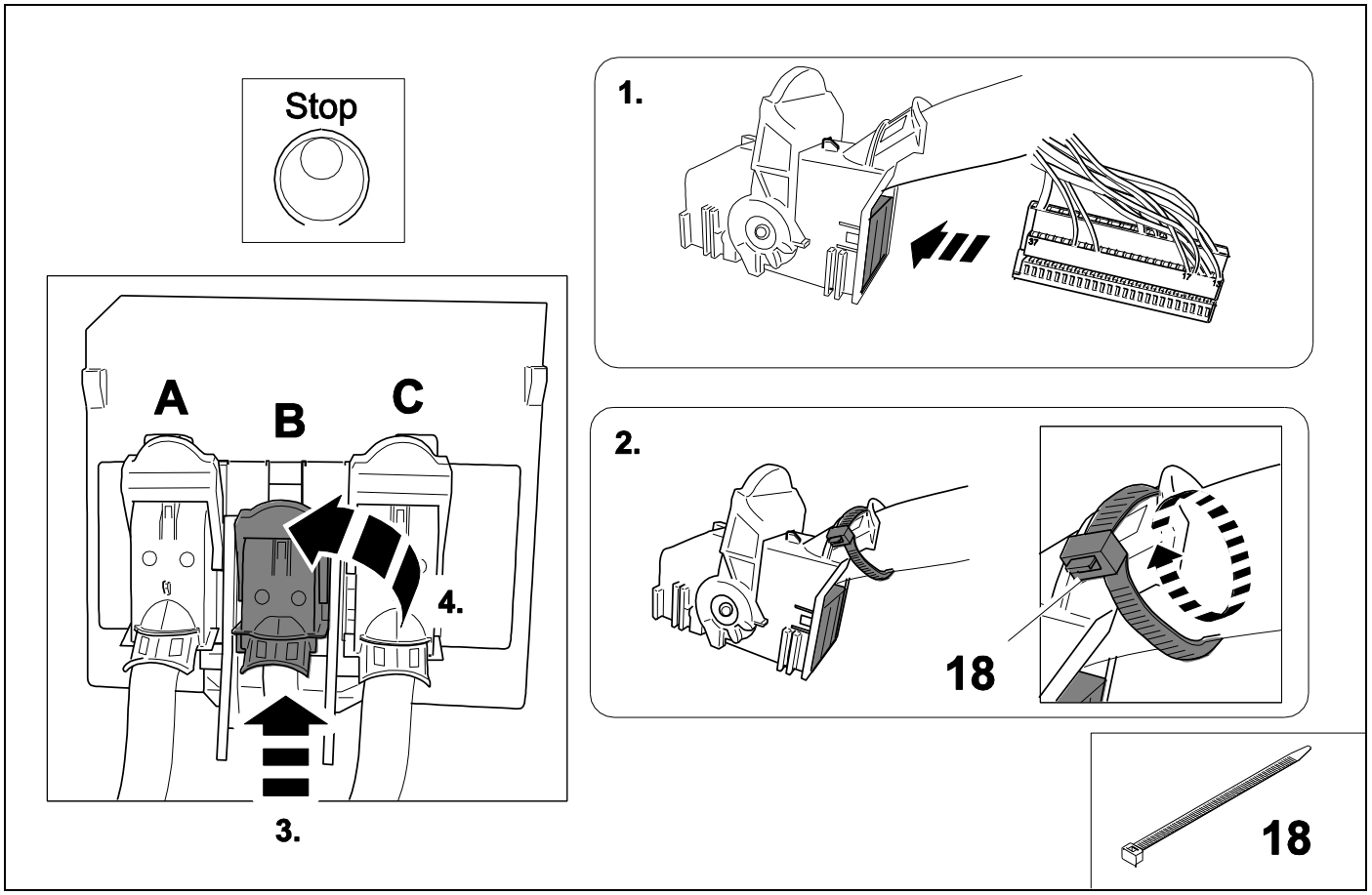

19 ⇨ 8

CAN

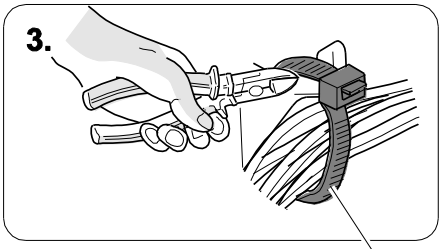


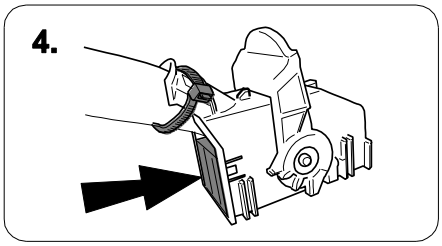


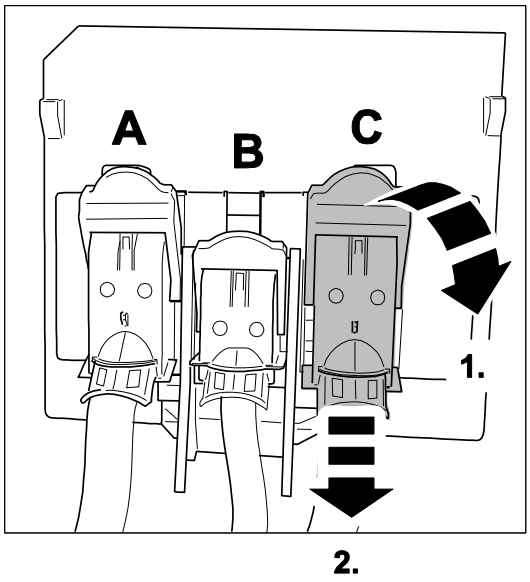


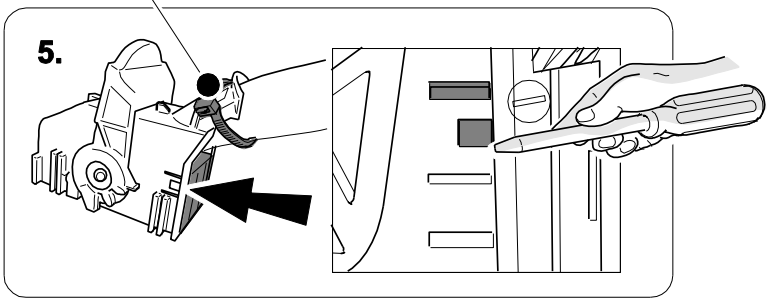


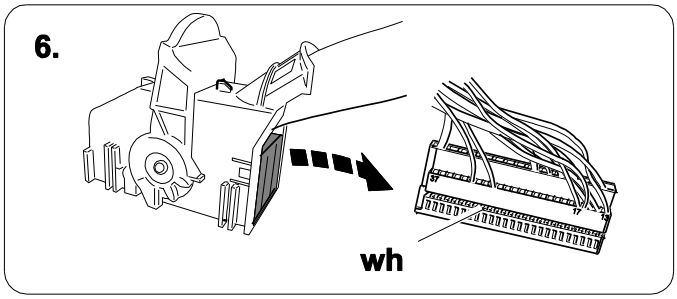


20 ⇨ 8

CAN

PIN 47
or-bn

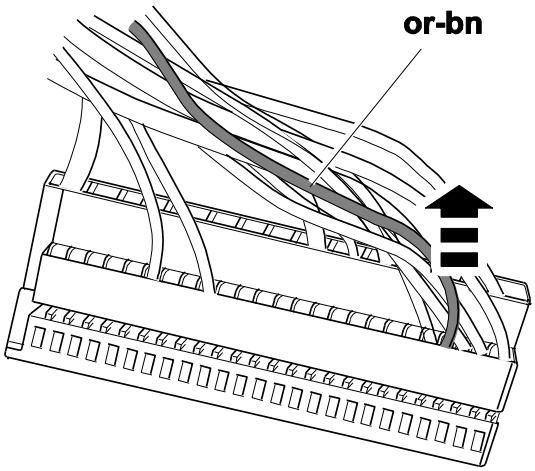

PIN 46
or-gn

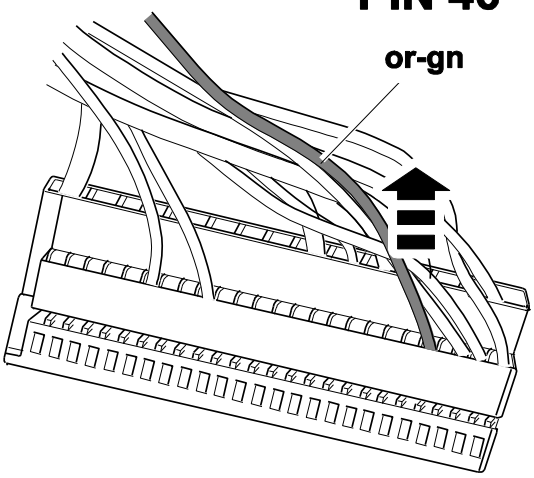

21 ⇨ 8

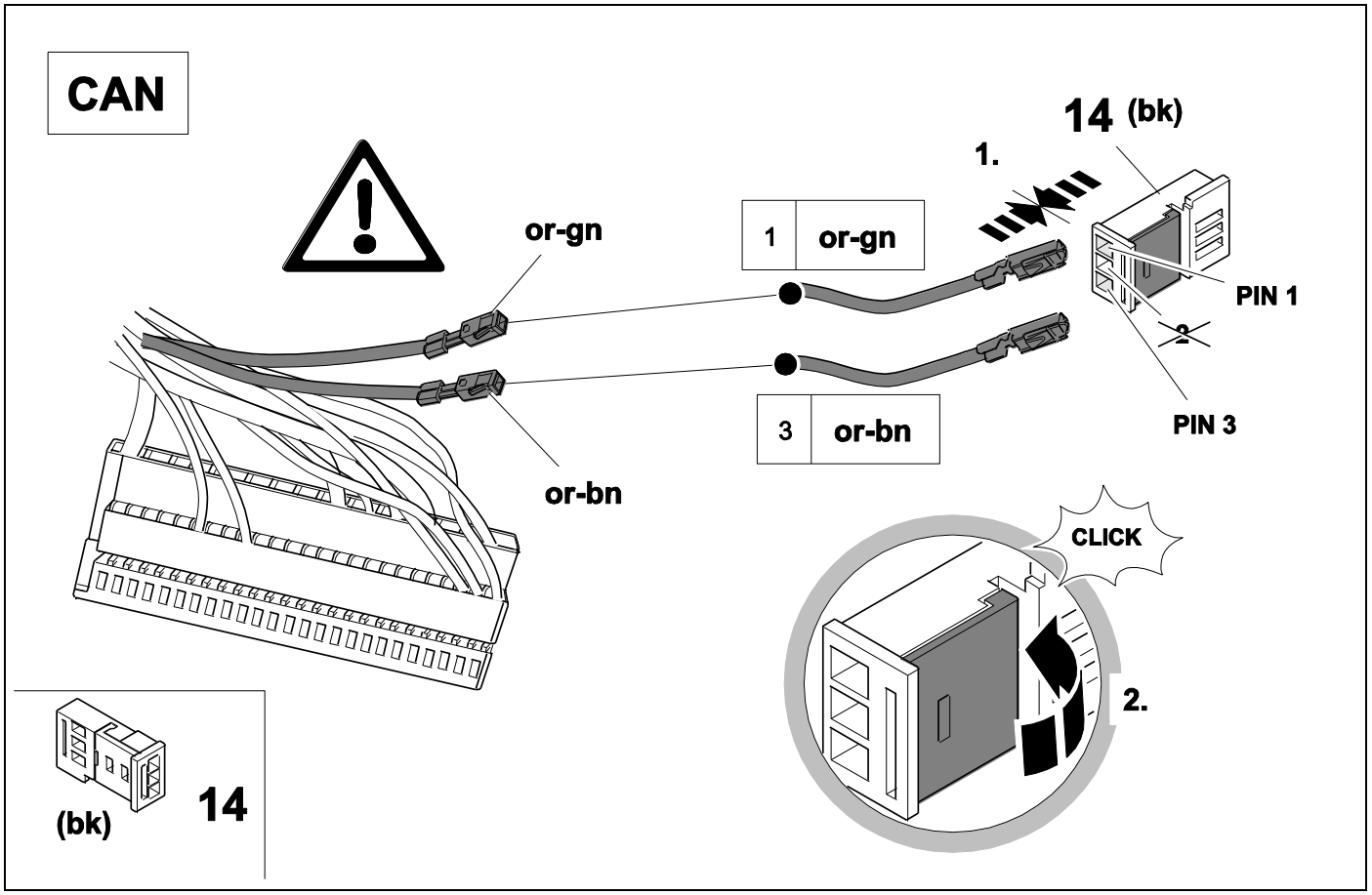
CAN
14 (bk)
1.
or-gn
1 or-gn
PIN 1
2
3 or-bn
PIN 3
or-bn
CLICK
2.
(bk)
14

22 ⇨ 8

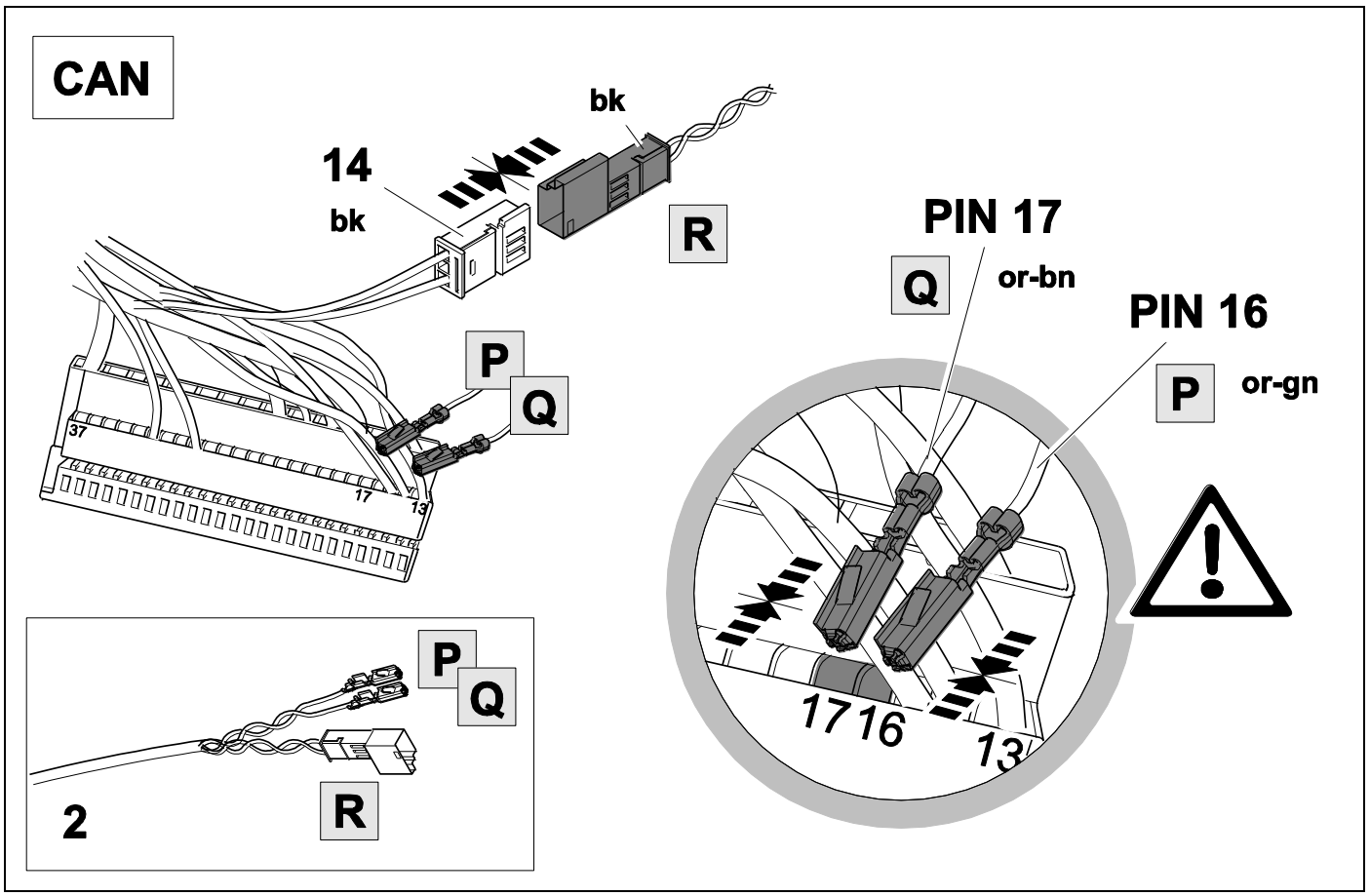
CAN
bk
14
bk
R
P
Q
37
17
13
PIN 17
Q
or-bn
PIN 16
P
or-gn
17 16
13
P
Q
R
2

## 23

⇨ **8**

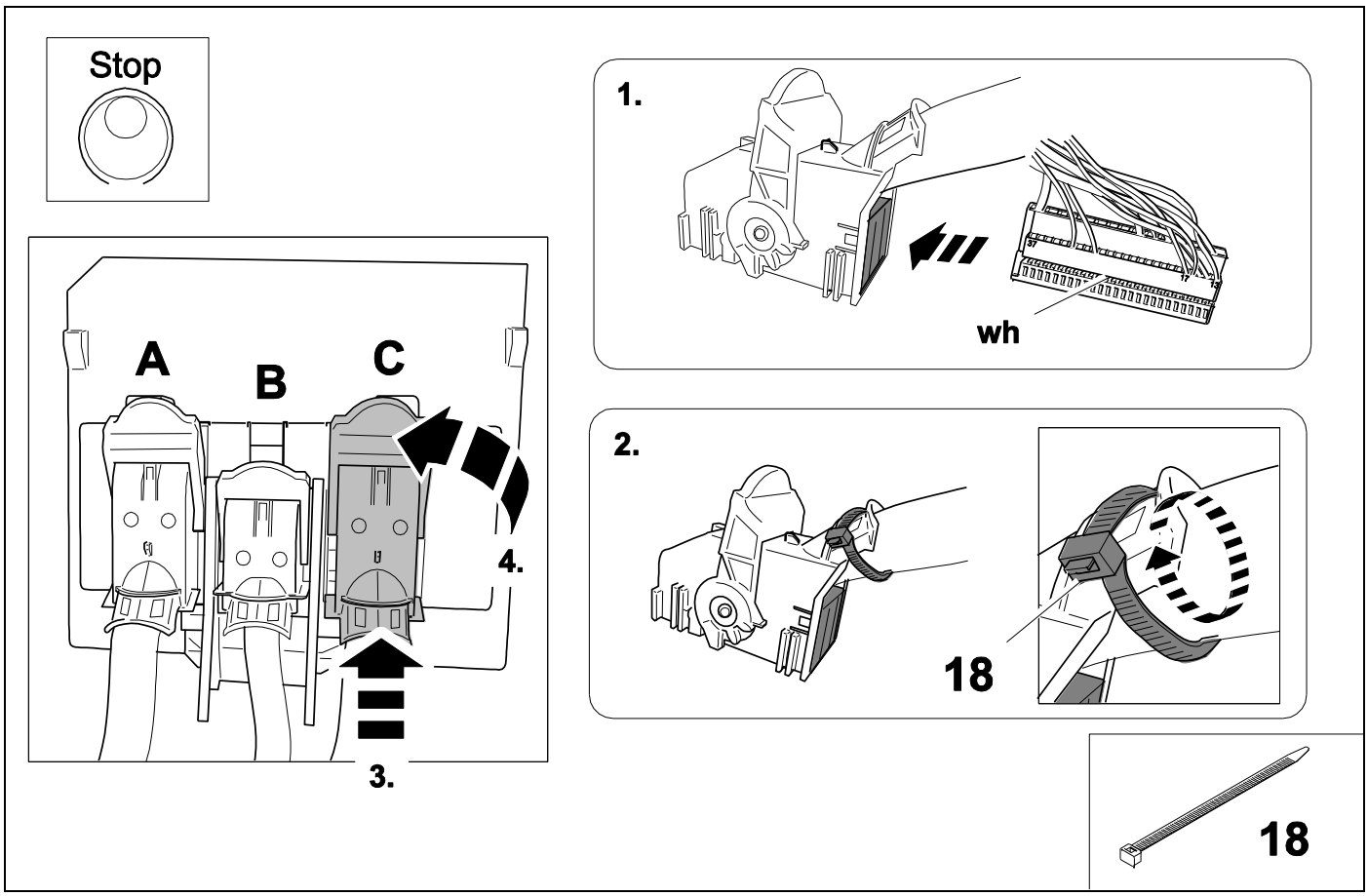


## 24

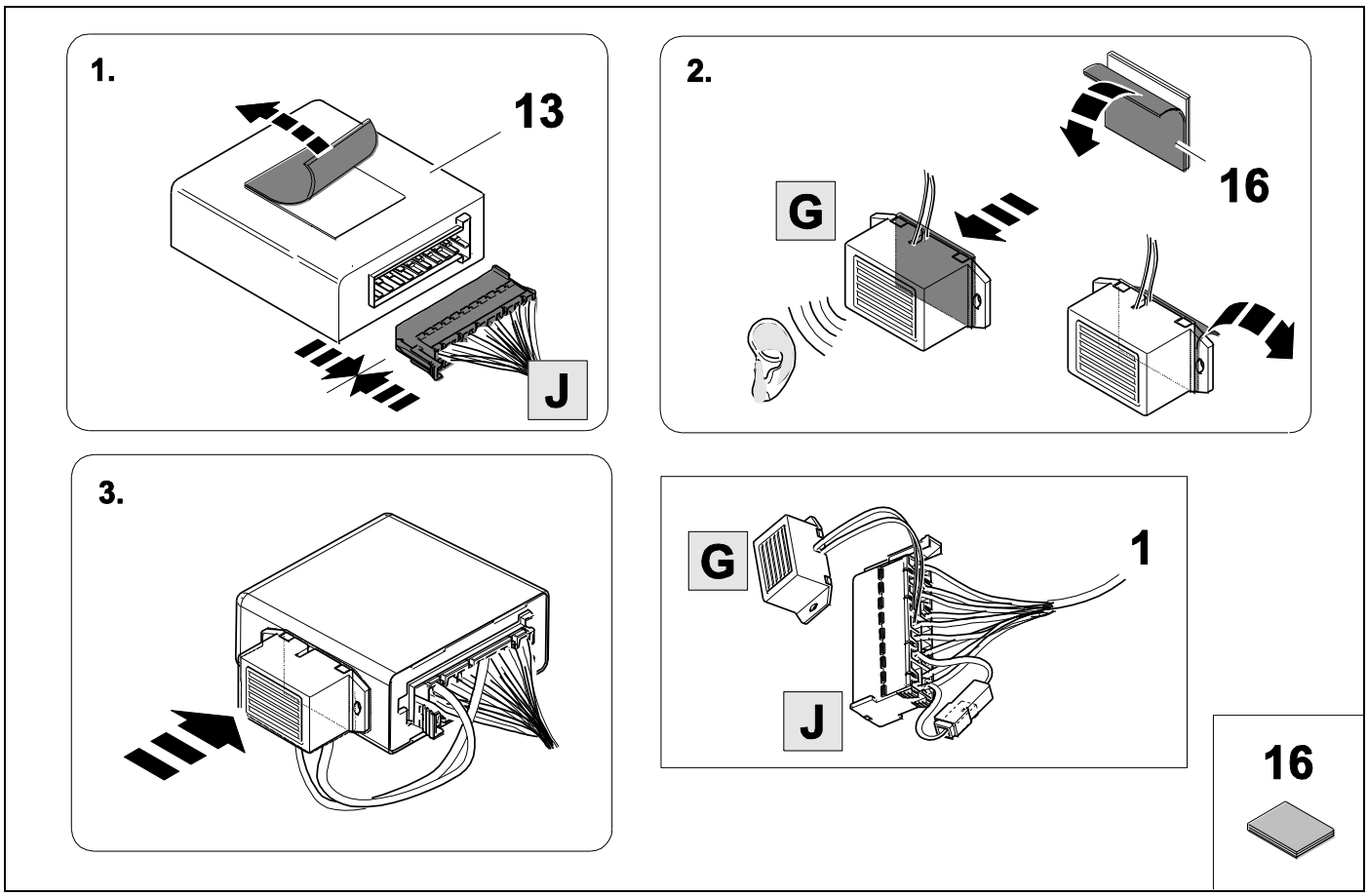

**25**

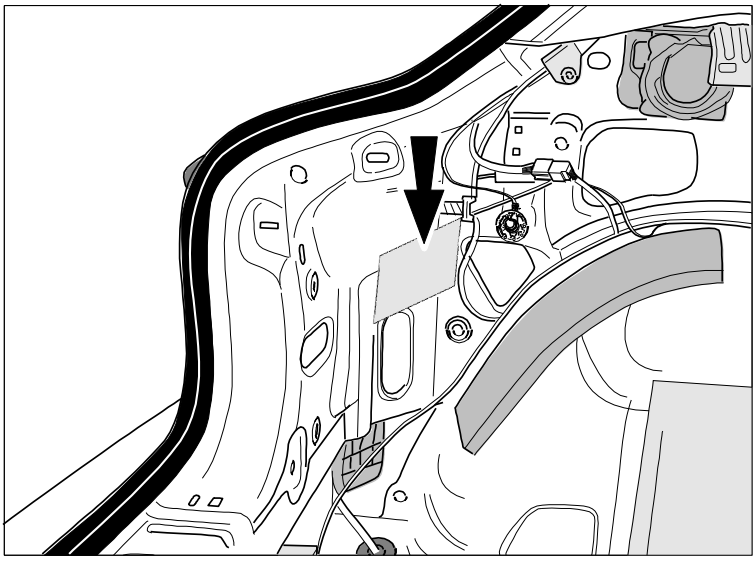

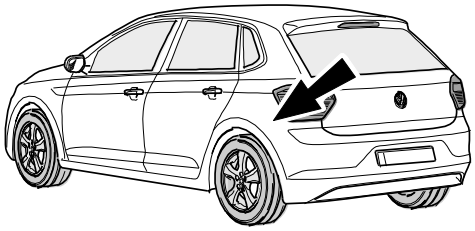

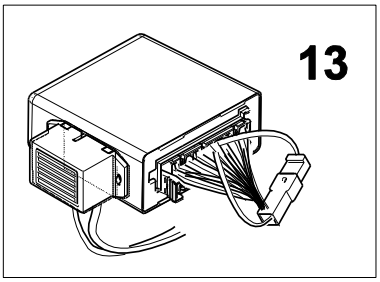


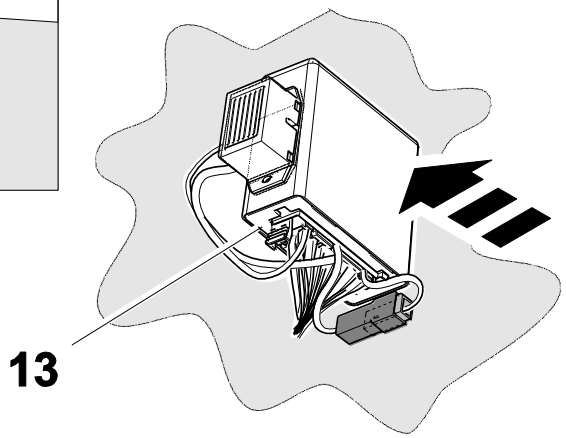

BRAKE CONTROLLER PREPARED

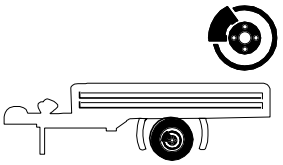

# Trailer Brake Preparation

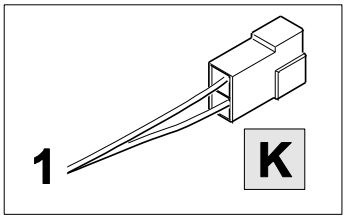


1.

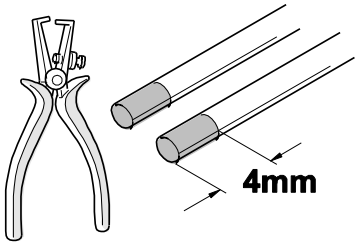


2.

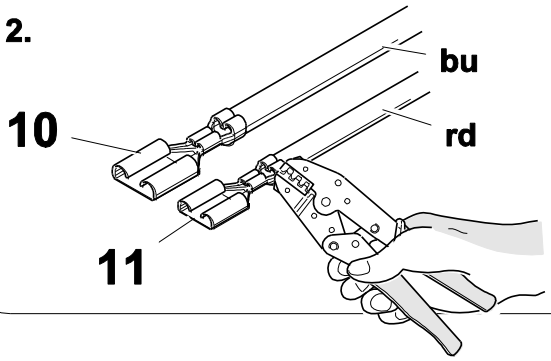


3.

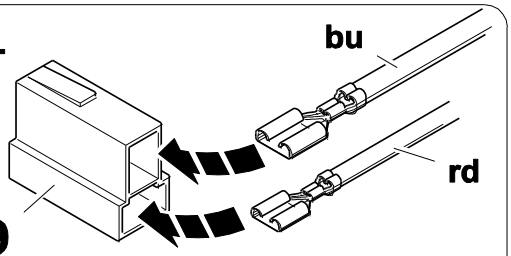


4.

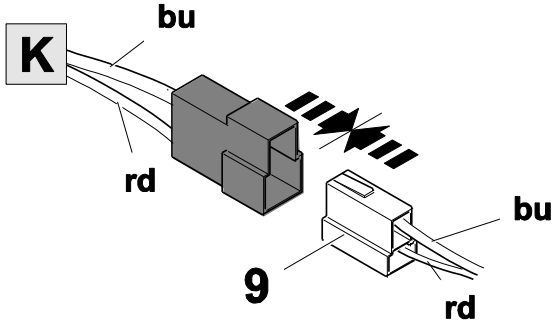


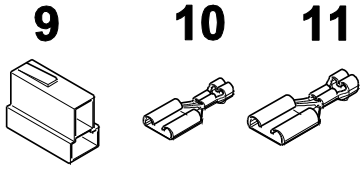


27

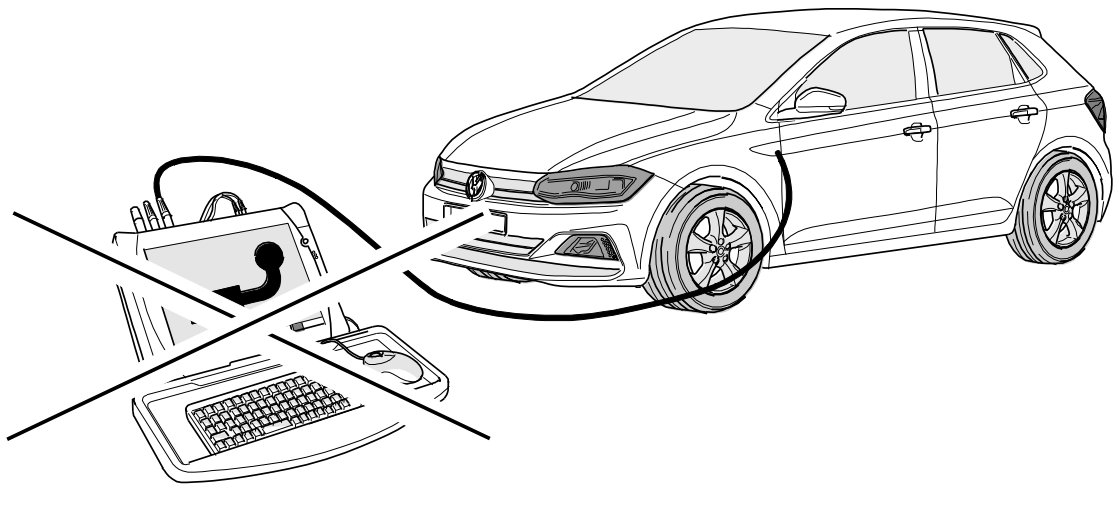

## 27 CHECK ALL LIGHTING FUNCTIONS

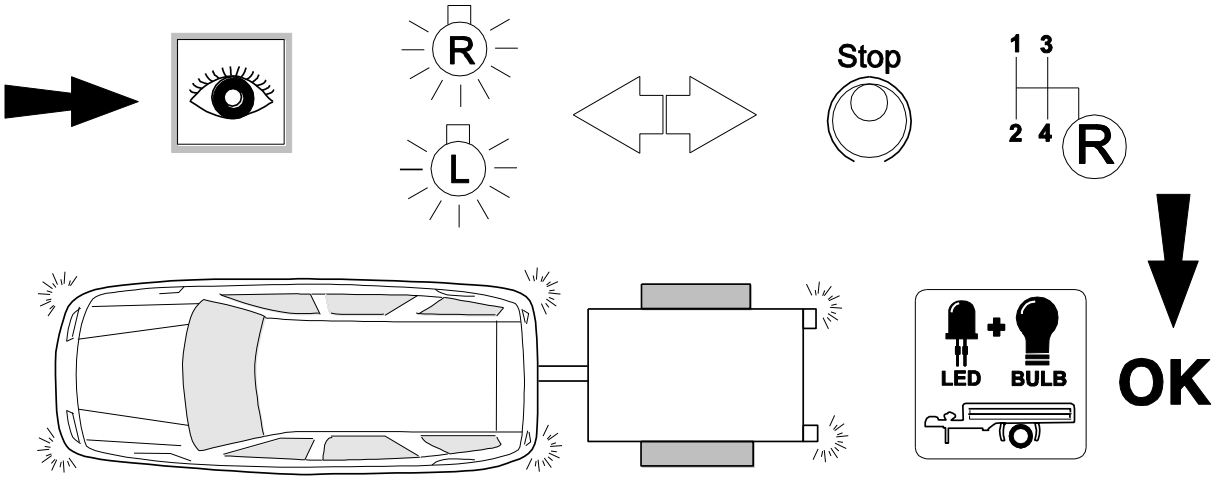


## 28

**Bulb out condition indicated**

**with sound from modul spaker**

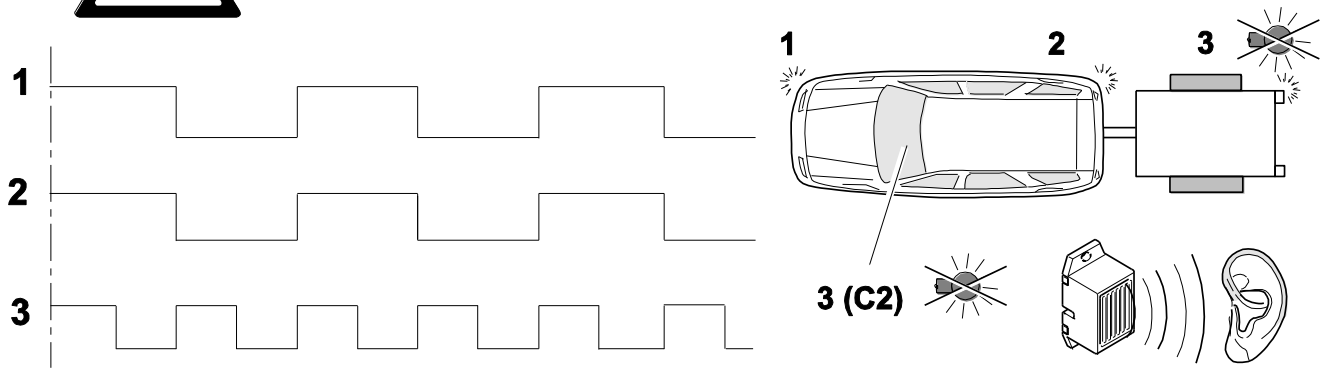


## 29

⇨ **12** + **13**

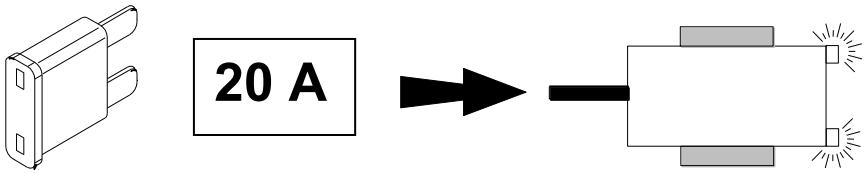


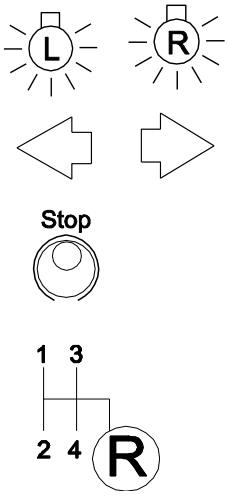

## 30 CODING OPTIONAL - SKIP THESE STEPS IF CODING OF THE VEHICLE IS NOT PLANNED

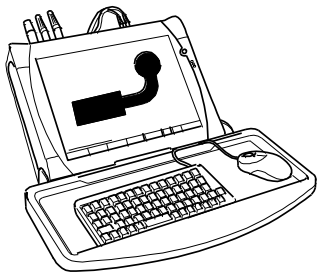

### With vehicle coding

31 ⇨ 34

**TSP**
Trailer
Stability
Program

**! Attension !**

**These codings may be lost**

**after visiting an authorized workshop!**

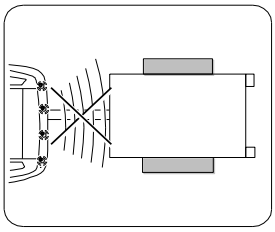

**P**
Trailer
Assistent

## 31

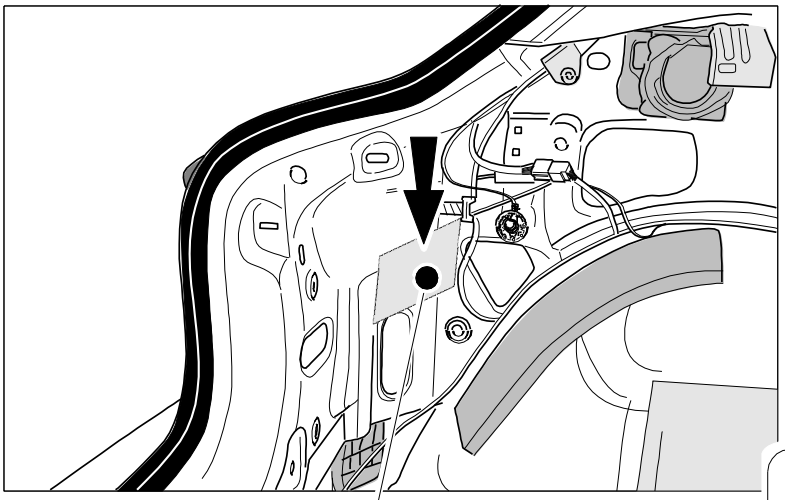

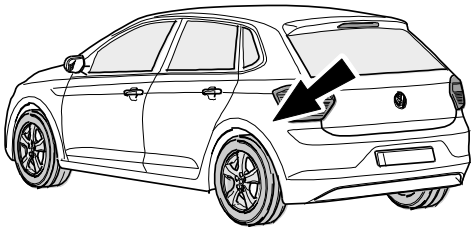

**DO NOT disconnect unless coding is planned for this vehicle as errors will appear on the vehicle dash.**
**Plug back in and cycle ignition twice to clear errors**

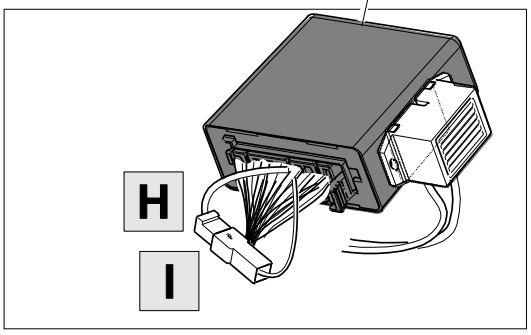


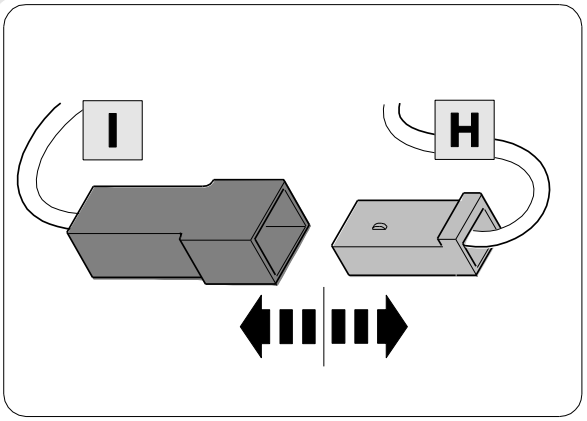

# OPTION vehicle coding

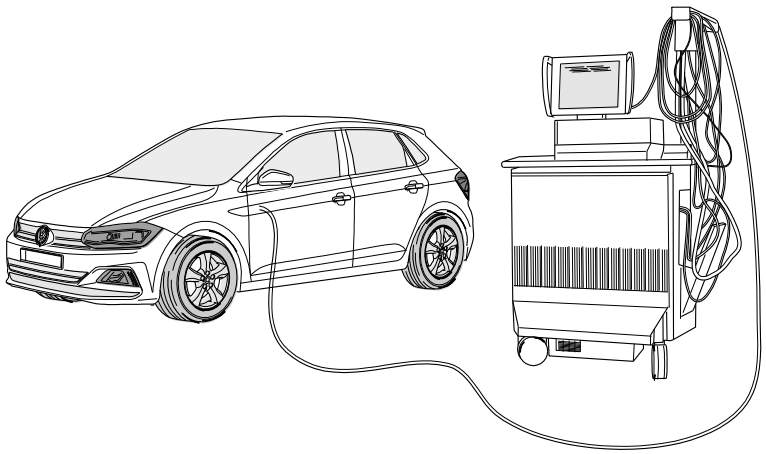

**Coding with VCDS, please note:**

The procedure described below for encoding and enabling the trailer mode only serves for a general orientation and can vary greatly depending on the model (motorisation / equipment). If necessary less or further control units will have to be adapted.

- **After connecting to VCDS, the "69 trailer function" controller** has to be set to encoded **in the _19 installation list.**
- **Coding EZE_09**
  **(electronic central electric controller; Login 31347)**
  Diagnosis / Networking plan / Controller self-diagnosis encode hitch_ecu > installed Vehicles from (MJ 2017>>) adjustment > channel -integration trailer control unit > installed
- **Coding ZKS_46 (Central module convenience system)**
  trailer monitoring > put on active trailer control unit > installed
- **Coding_03 (Brake Electronics; Login 61378)**
  Adjustment > channel - trailer stabilization, change value to > active
- **Encoding SWA_3C (Lane Change Assist)**
  ECU for draw bar > with ECU for draw bar
- **Encoding SCH_ 17 (Dash panel insert)**
  Trailer > yes
- **Encoding RFK_6C (reverse camera system)**
  equipment_ahk > installed
- **Encoding STF_74 (chassis control system)**
  Trailer > installed
- **Encoding EPH_76 (PDC controller)**
  Trailer > trailer device can be removed manually
- **Encoding DiS_13 (controler distance control, possible Login 20103)**
  Control module for towing sens > installed or Control module for trailer recognition > installed (Byte 03 Bit 03)
- **Encoding FFF_A5 (front sensor system controller)**
  AAG > coded
- **Encoding HDE_6D (boot lid electronics controller)**
  Trailer > installed

**Important note on encoding and activating in trailer mode**

The aforementioned settings are carried out in the vehicle's electrical system and saved locally. During general updates for the vehicle software (for example, within the scope of service or repair work) the settings may be overwritten and deleted under certain circumstances. At this case, the trailer mode activation has to be updated again locally after the update. Diagnostic information relating to the trailer mode that may appear during variance comparisons with the data saved in the manufacturer's works, may form the basis of the local activation

# 33 CHECK BULB OUT DETECTION

BULB OUT CONDITION INDICATED WITH
INCREASED INDICATOR FREQUENCY

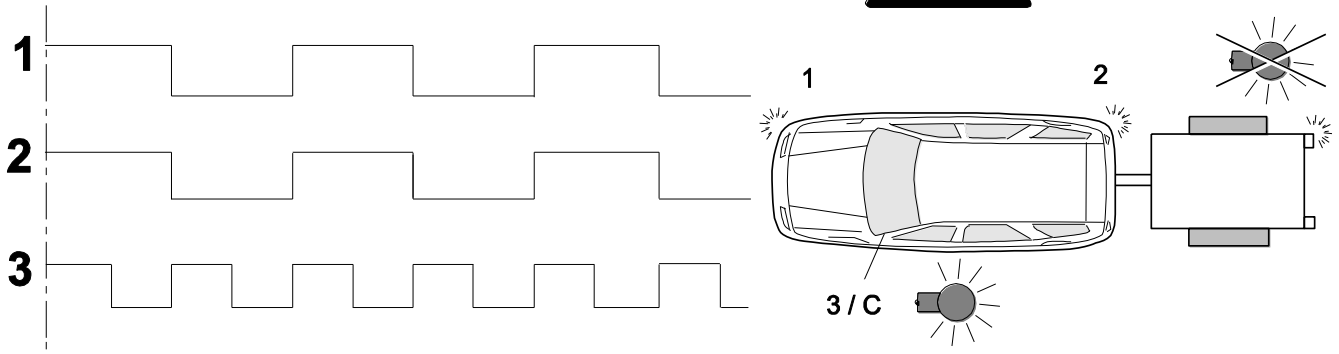


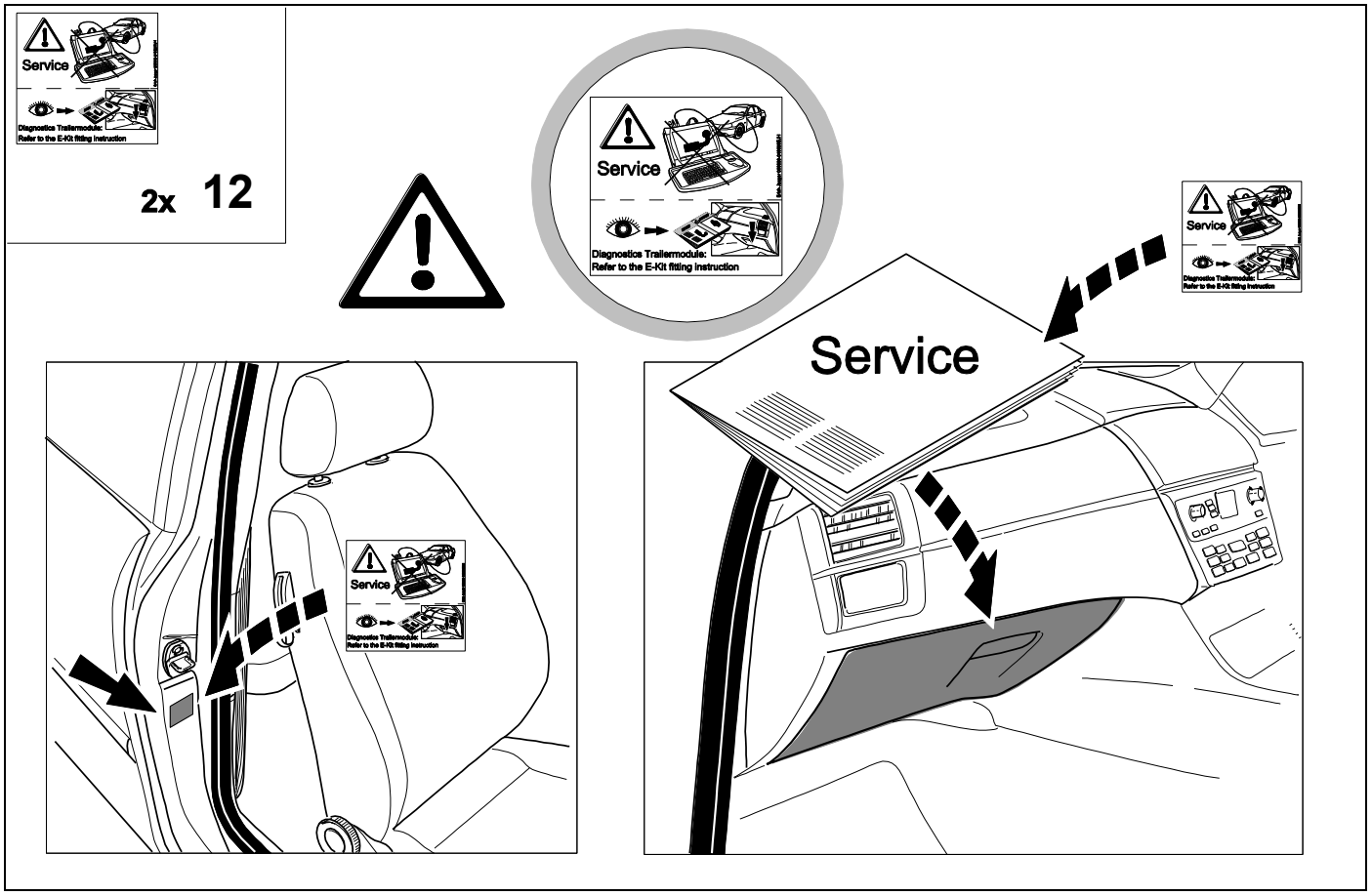

# Status LED for self-diagnosis

## Operation Support

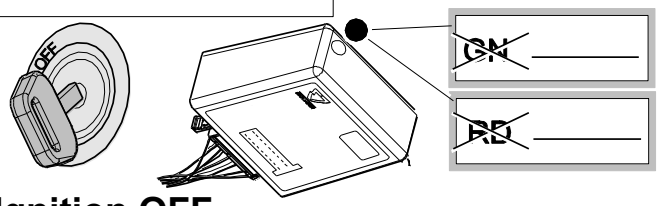


No CAN-Data = Standby / Sleepmode

**Ignition OFF**

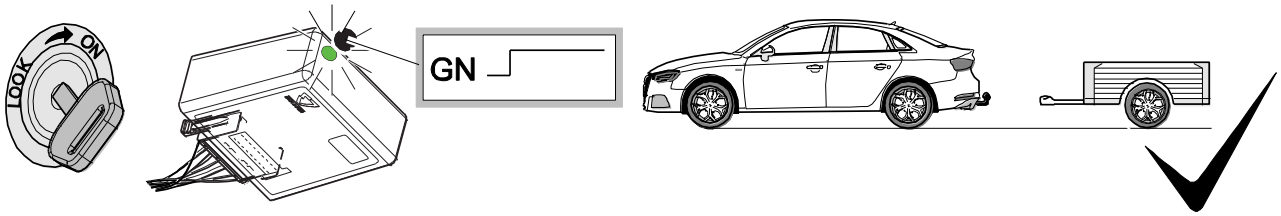


**Ignition ON**

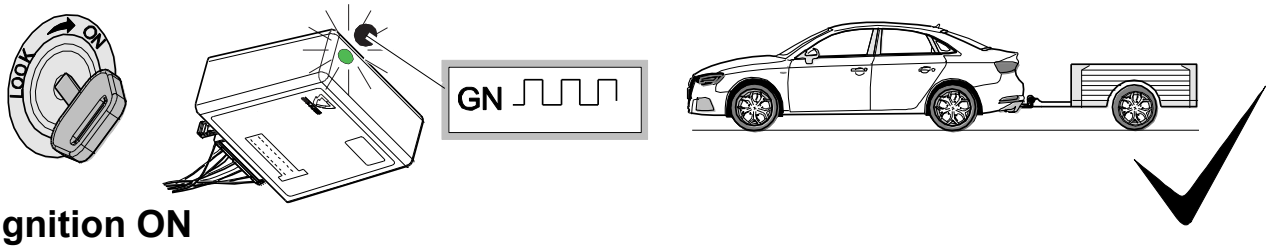


**Ignition ON**

## Failure Support

CAN-Data Wire → 1x max. 5 min.

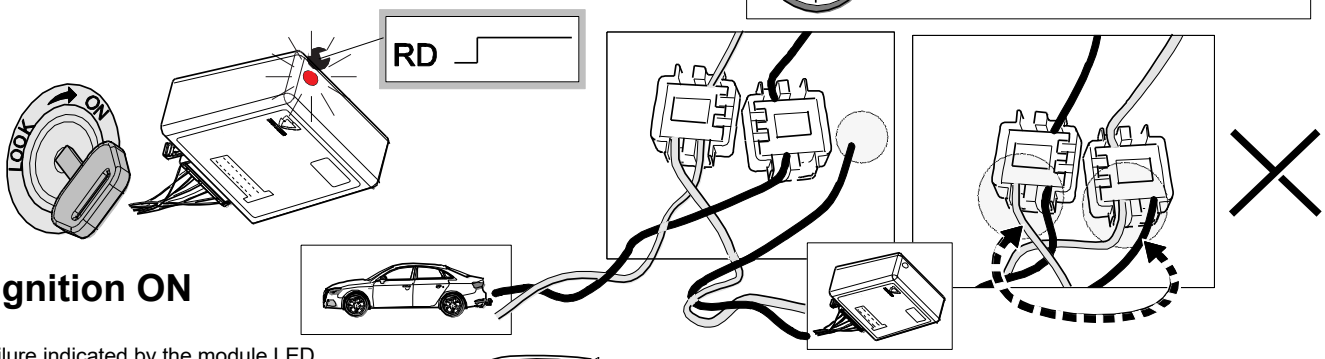


**Ignition ON**

Failure indicated by the module LED glowing red for a maximum of 5 minutes. If trailer connected the tail lights will also glow indicating failure of CAN signal.

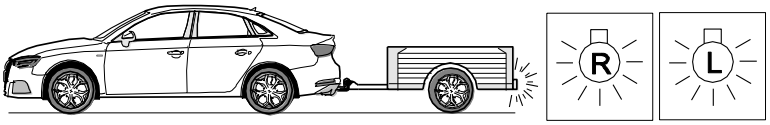


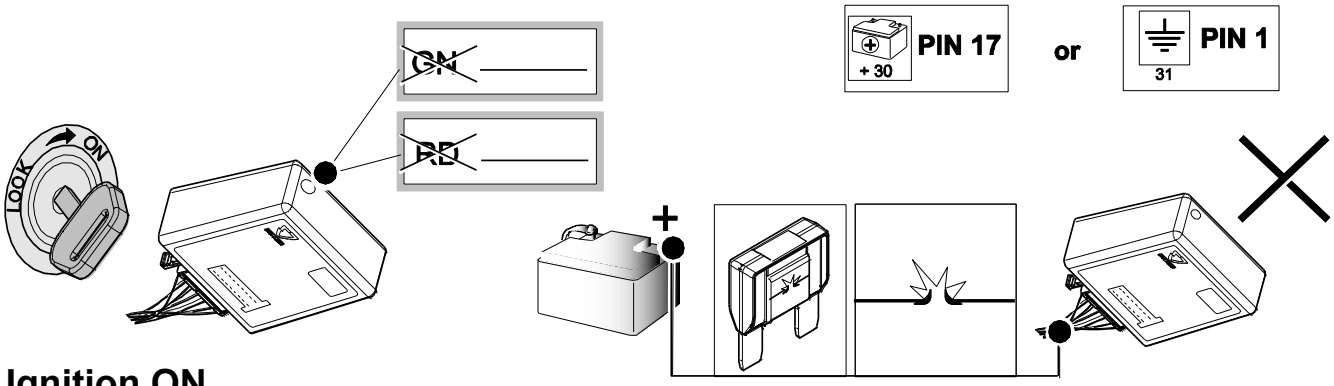


**Ignition ON**

GB

Subject to change in terms of construction, equipment and colour, and may contain errors.
The information and illustrations are non-binding.