ERICH JAEGER

Installation instructions

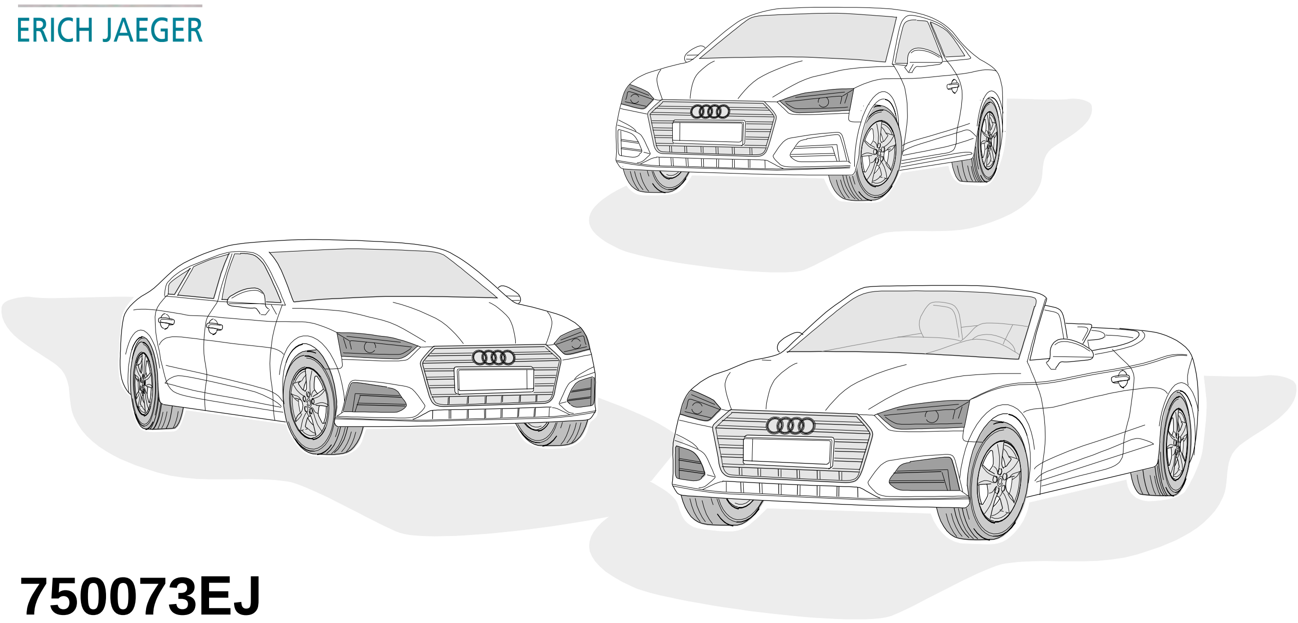

750073EJ

AUDI A5 Sportback	**04/17 >>**
AUDI A5 Coupe´	**04/17 >>**
AUDI A5 Cabrio	**05/17 >>**

SCAN FOR
LATEST
INSTRUCTIONS

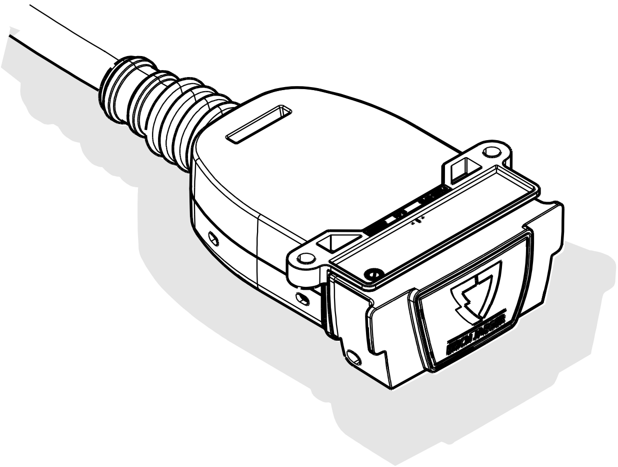

Jaeger FLEX 2in1

LED + BULB

BRAKE CONTROLLER PREPARED

WATERPROOF SOCKET INCLUDED
WEATHERLOCK™

MADE TOUGH WITH FIBERCORE™ TECHNOLOGY

SELF-DIAGNOSTIC CAN-BUS ECU
JaegerCANtrol™

Reference:

The following information must be reviewed before beginning the assembly:

The installation instructions are to be thoroughly read.
The installation should be carried out by qualified personnel with the relevant technical knowledge. The vehicle manufacturers' current technical notices and information on retrofitting must be followed. The removal and replacement instructions found in the current repair manuals must be followed.
It must be ensured that the vehicle is technically suitable for the installation of a trailer hitch.

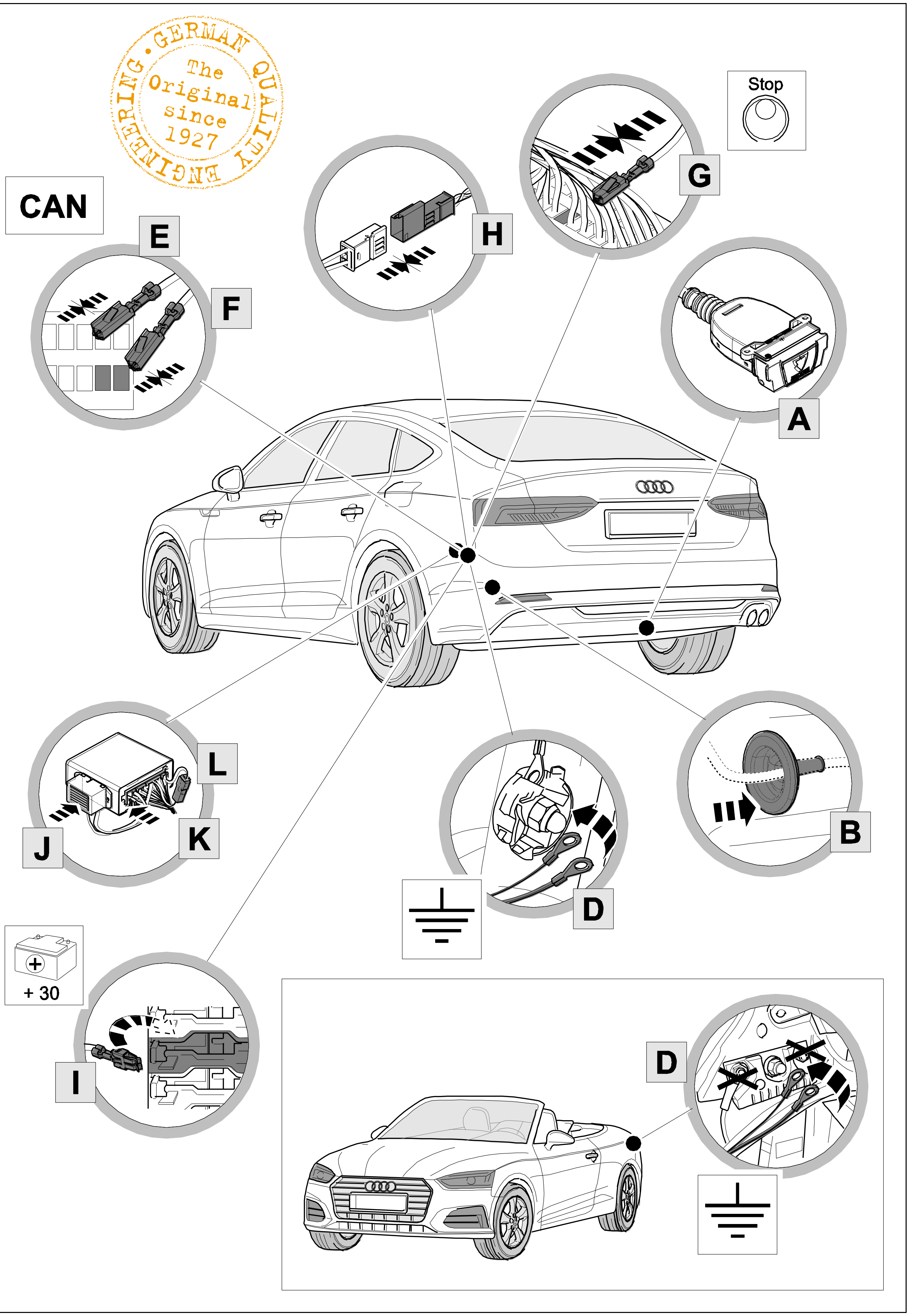
GERMAN QUALITY ENGINEERING
The Original since 1927
CAN
E
F
H
G
Stop
A
L
J
K
D
B
+ 30
I
D

KIT

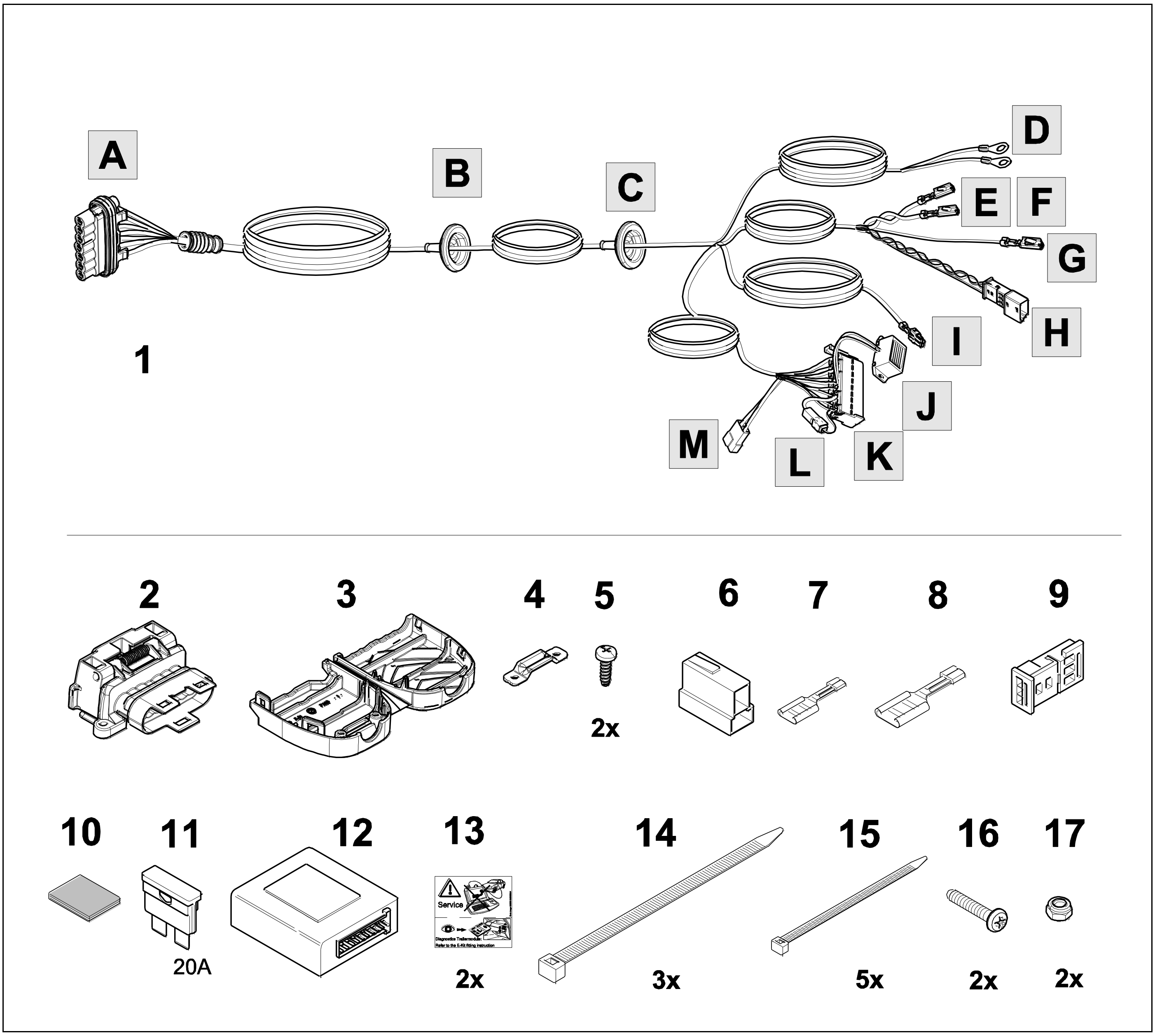
A
B
C
D
E
F
G
H
I
J
K
L
M
1
2
3
4
5
2x
6
7
8
9
10
11
20A
12
13
Service
2x
14
3x
15
5x
16
2x
17
2x

TOOLS

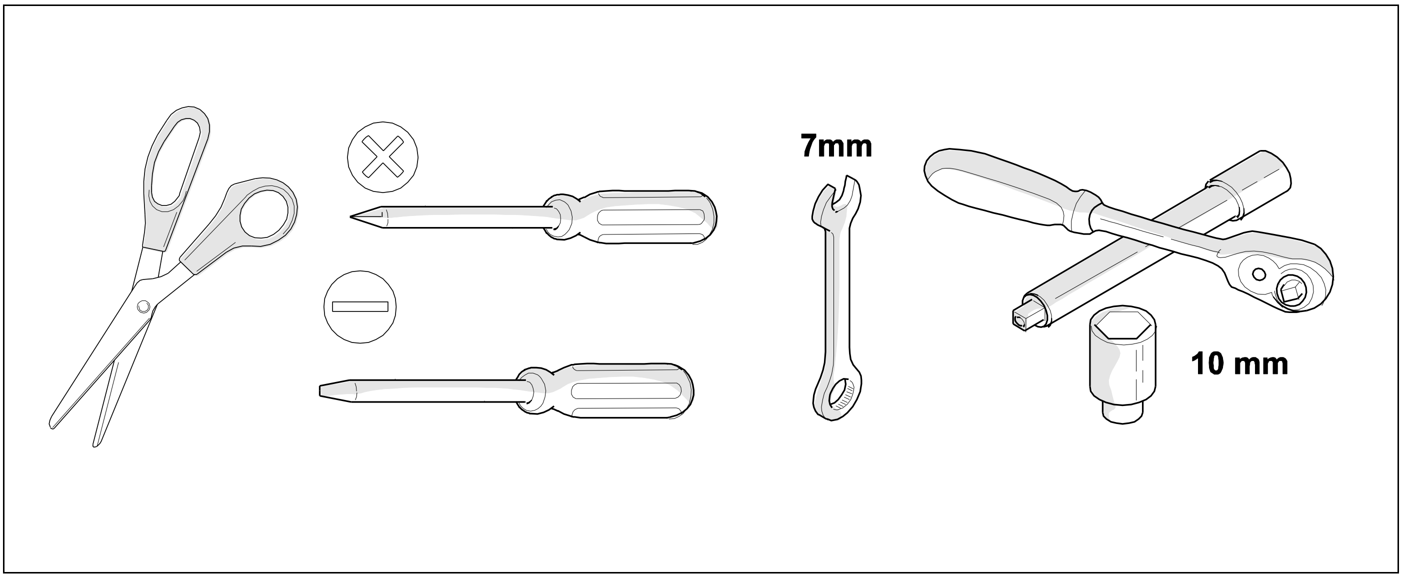
7mm
10 mm

1

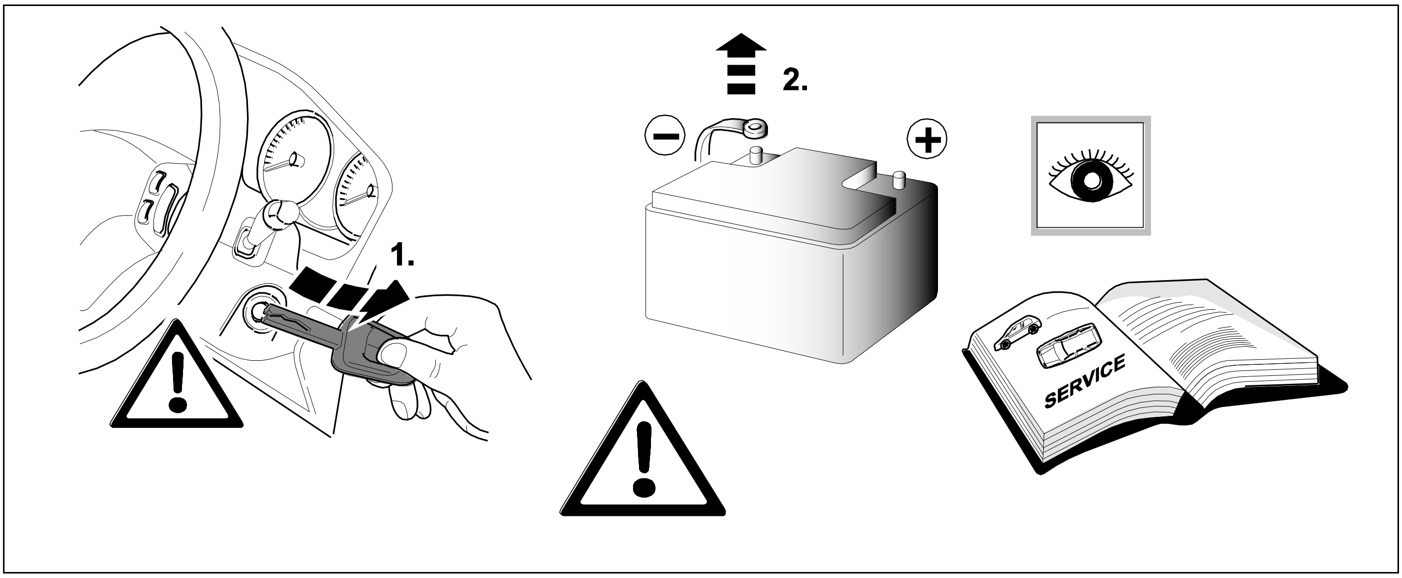

2

Sportback

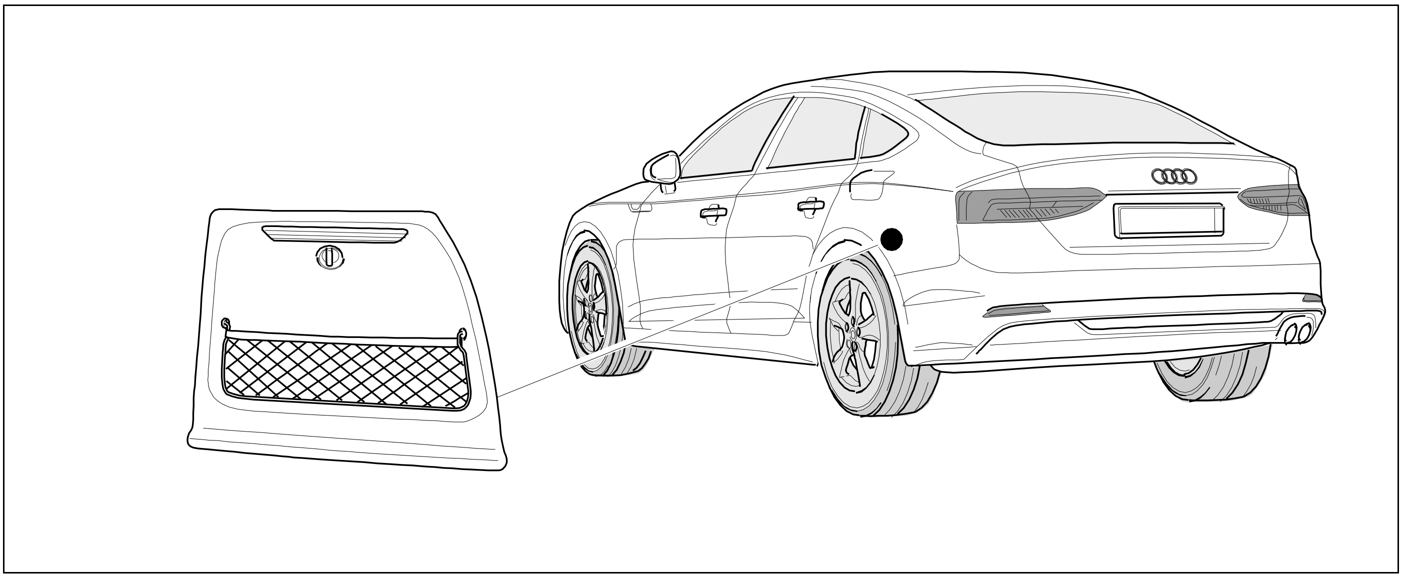

3

Coupe´/ Cabrio

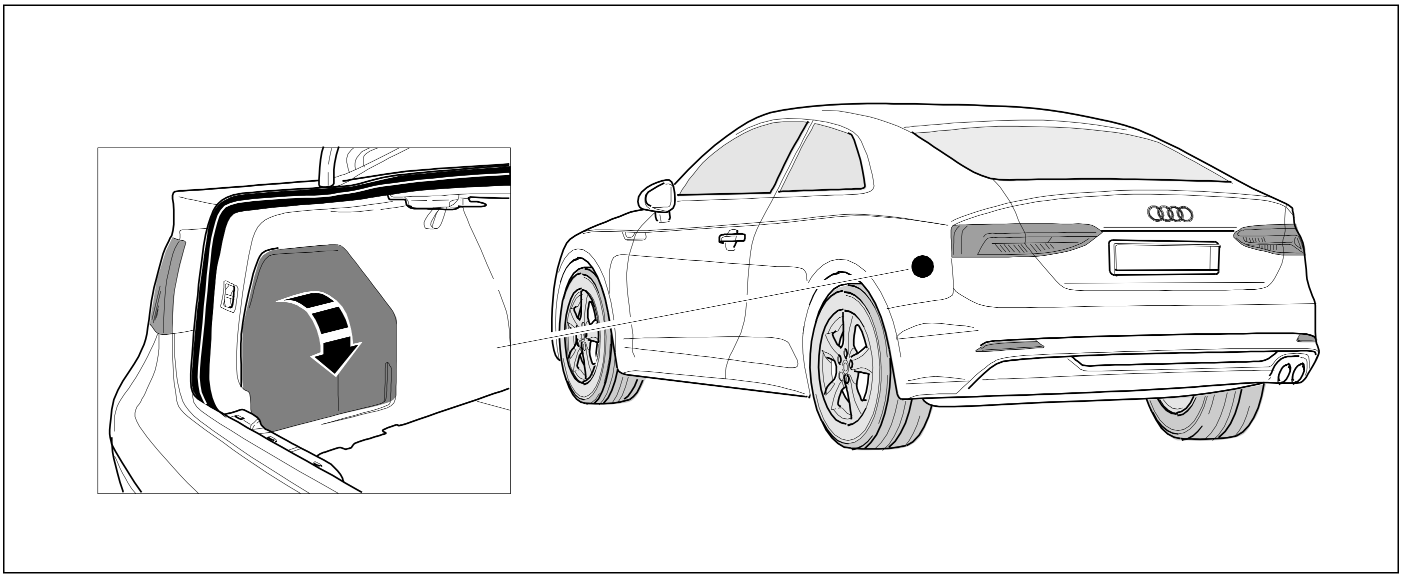

4

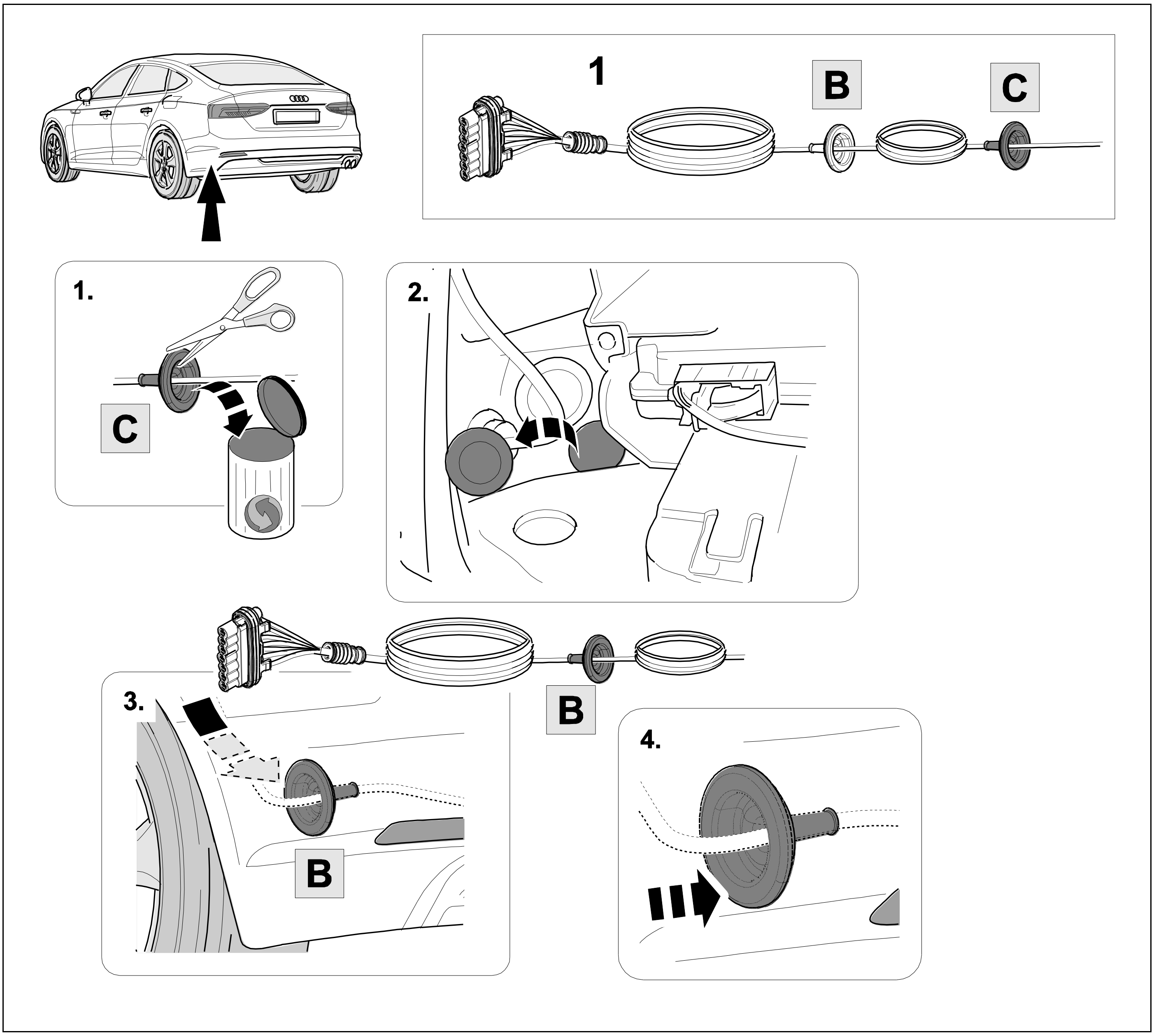
1
B
C
1.
C
2.
3.
B
B
4.

5

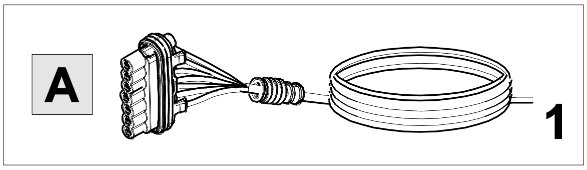

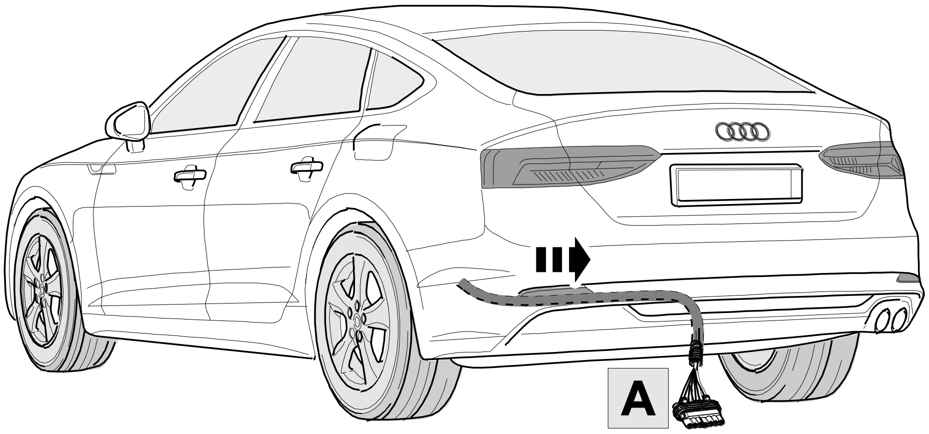

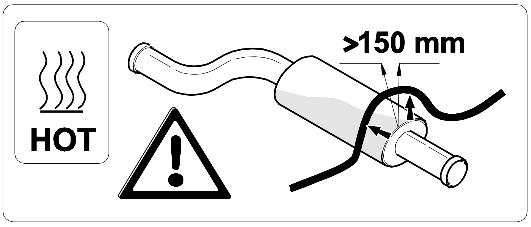

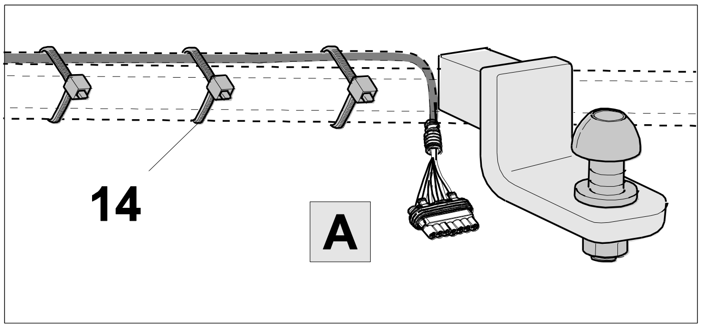

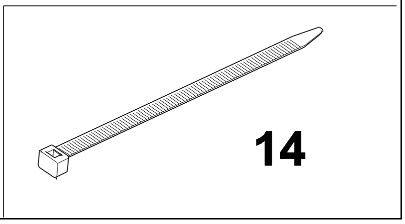

6

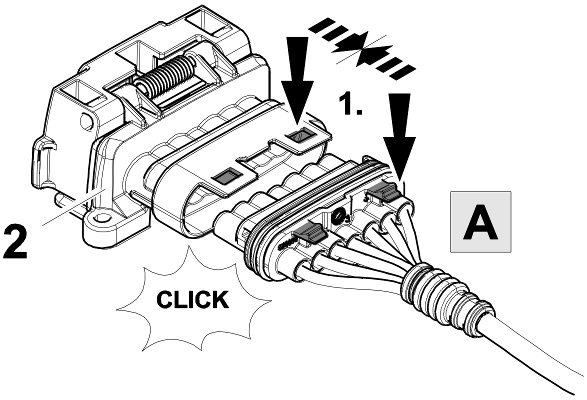

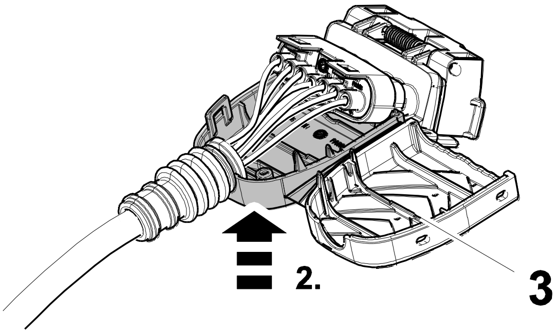

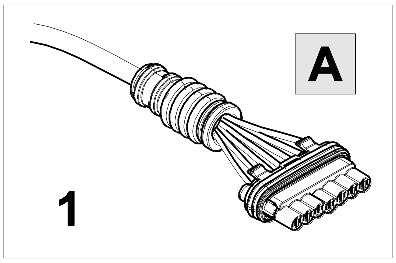

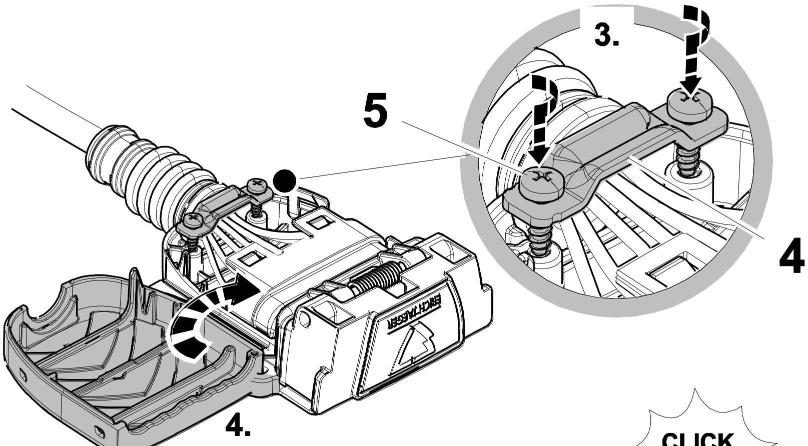

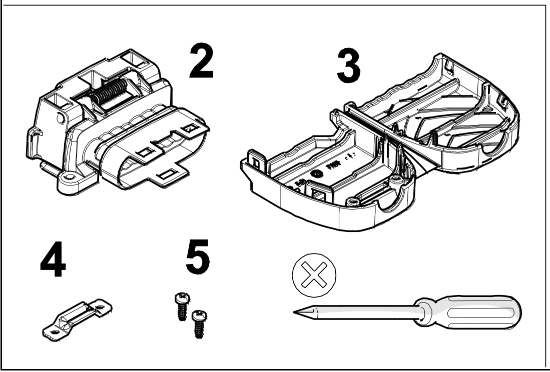

YouTube

SCAN to WATCH

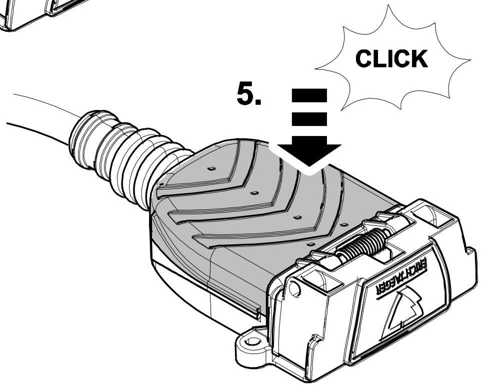

7

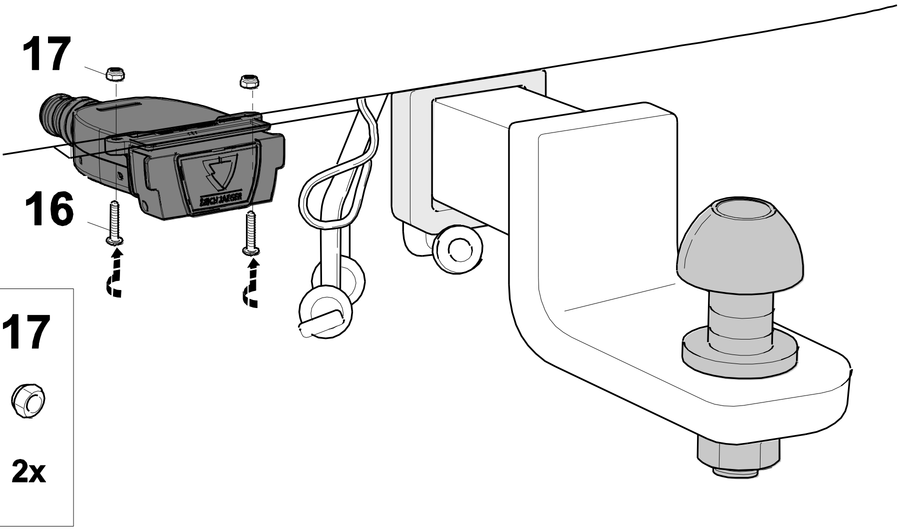

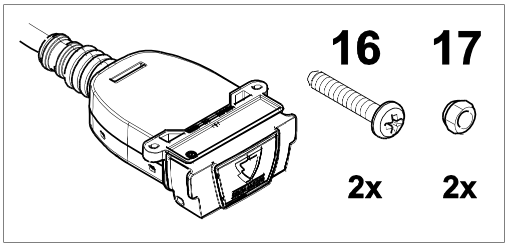

8 👁 ⇨ **9**

1	ye	⇦
2	bk	1 3 2 4 Ⓡ
3	wh	⏚
4	gn	⇨
5	bu	
6	rd	Stop
7	bn	

9	bk	wh	gy	gn	rd	bu	ye	bn	pu	or	no
GB	black	white	grey	green	red	blue	yellow	brown	purple	orange	not occupied

10 **Sportback**

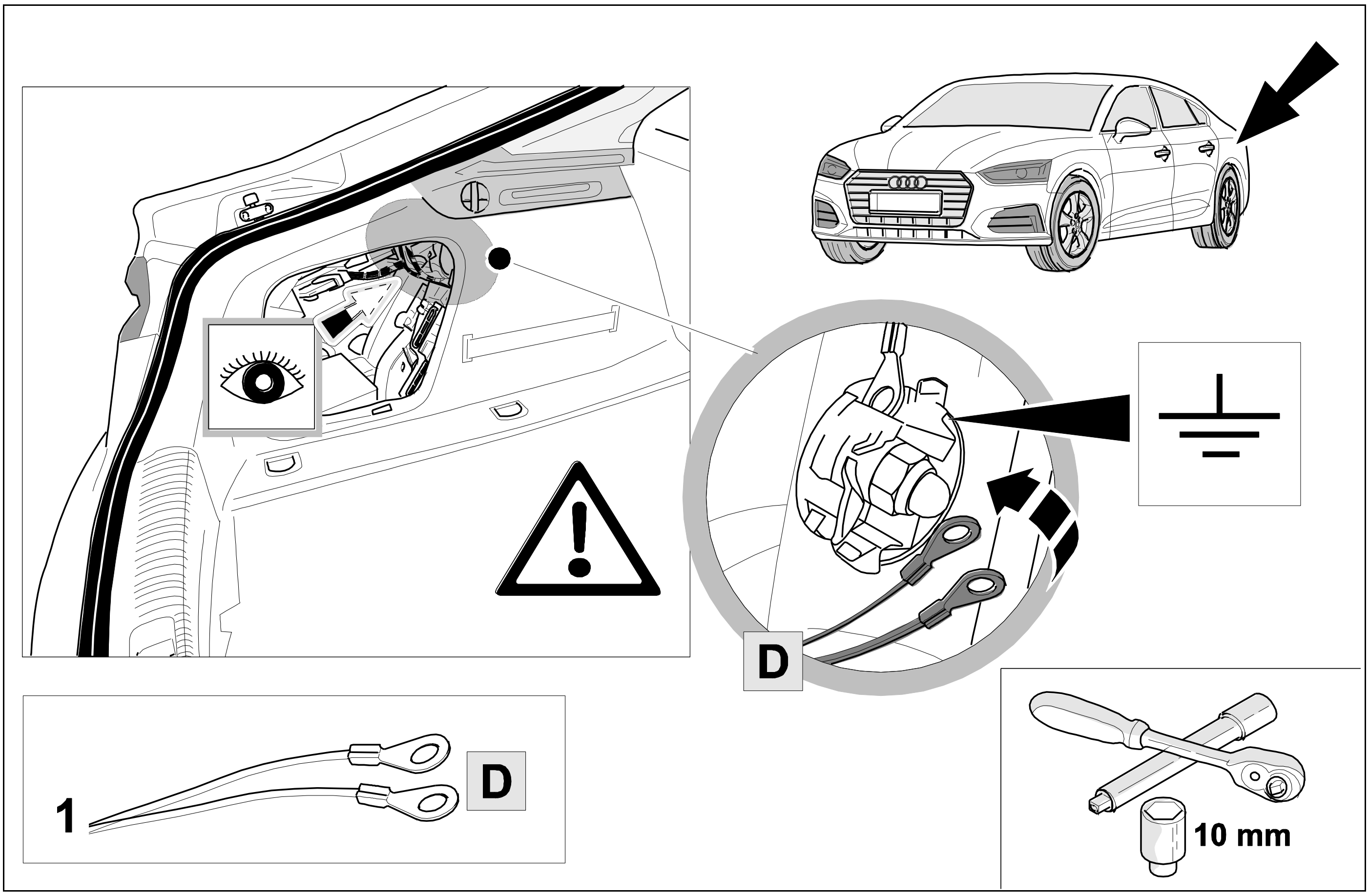

11

Coupe´

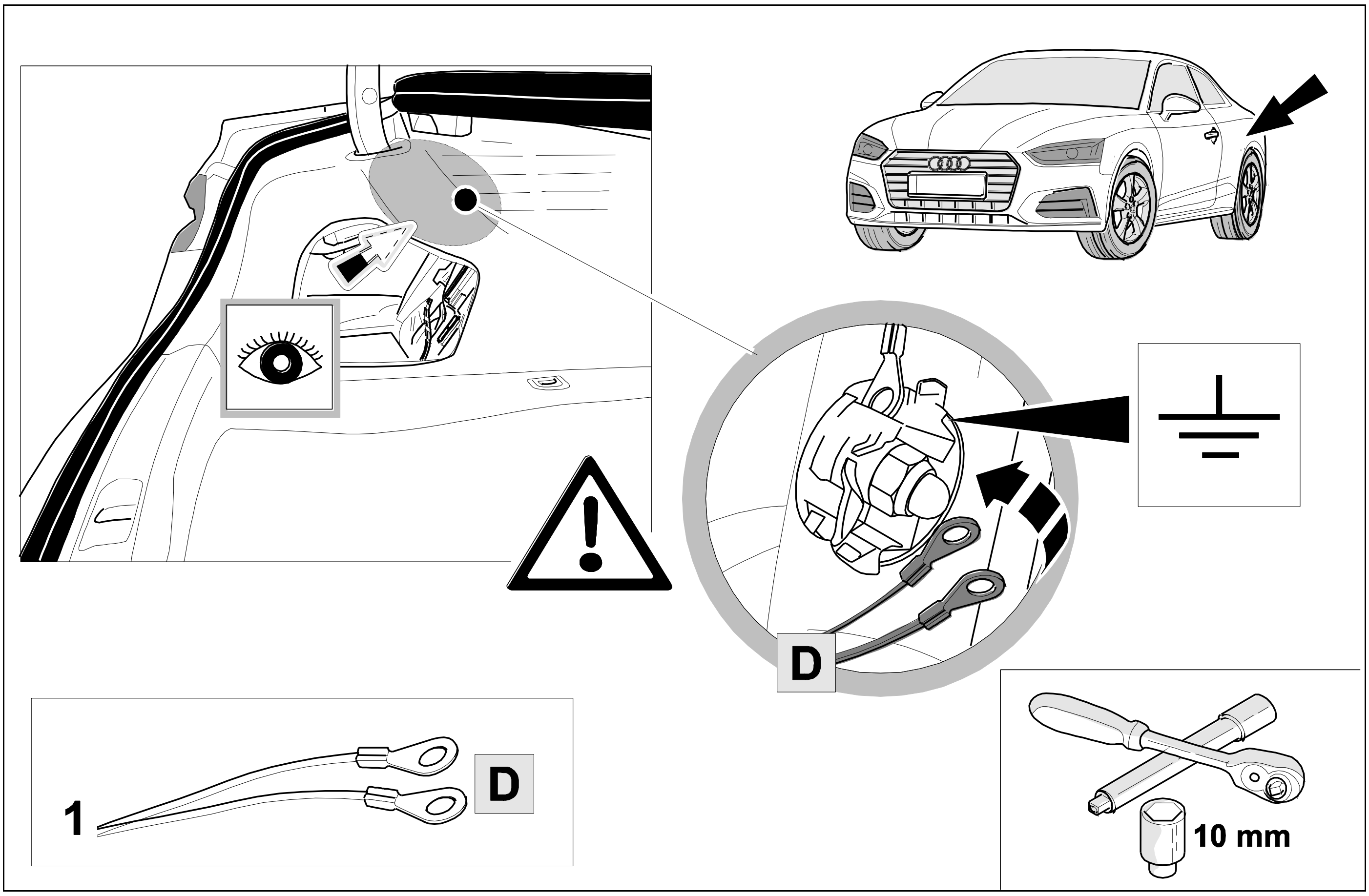

12

Cabrio

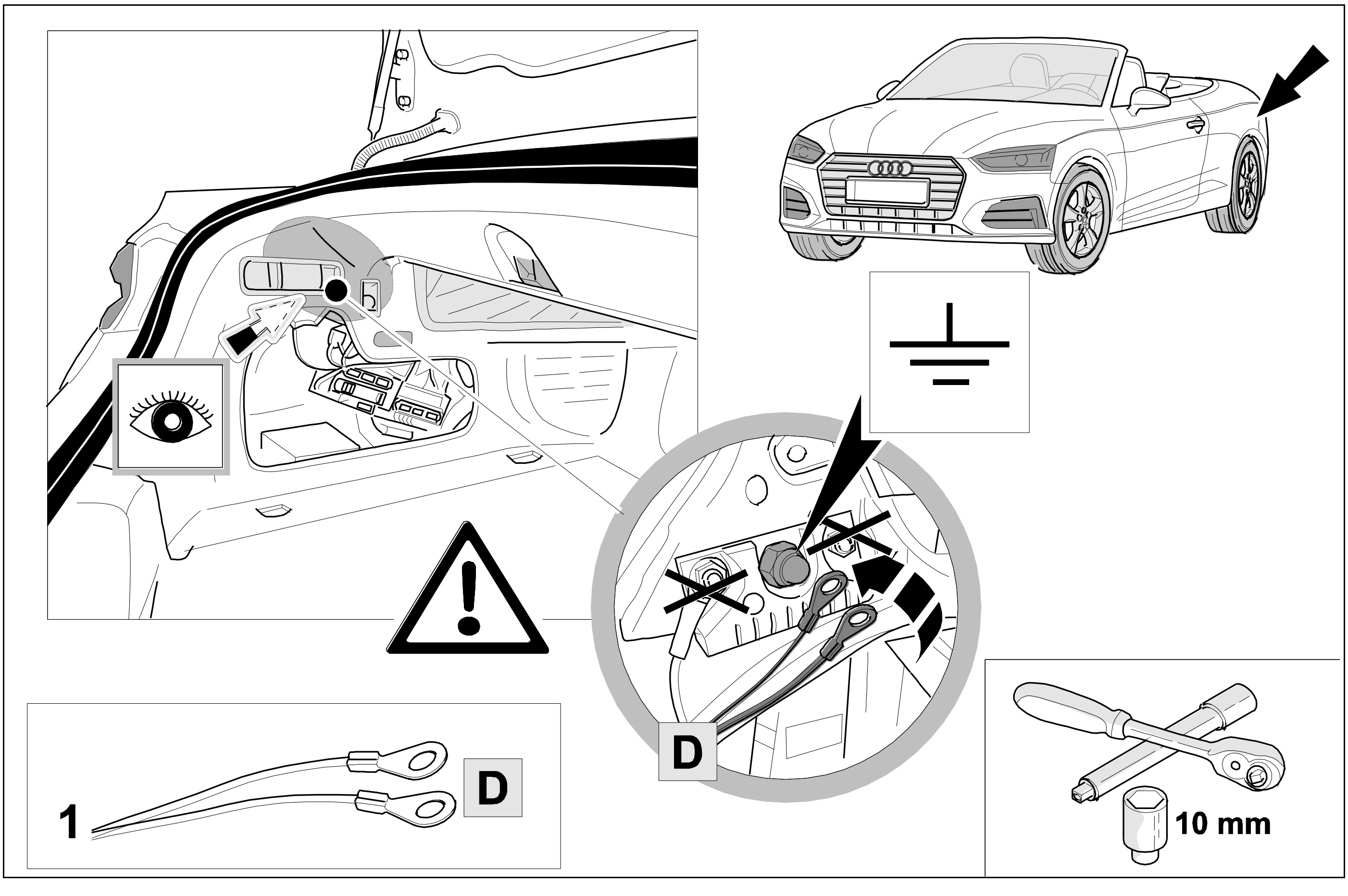

13

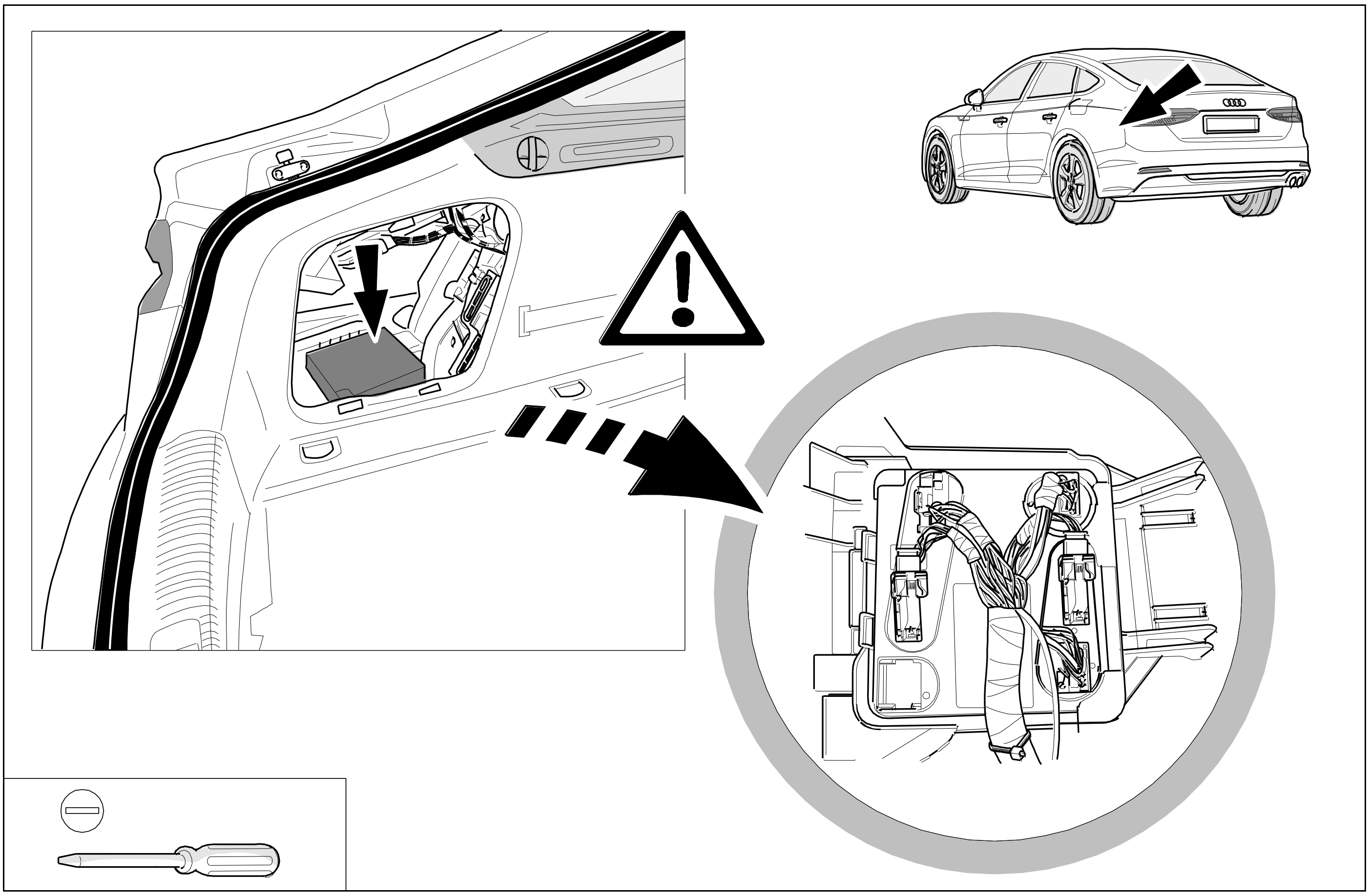

14

⇨ 9

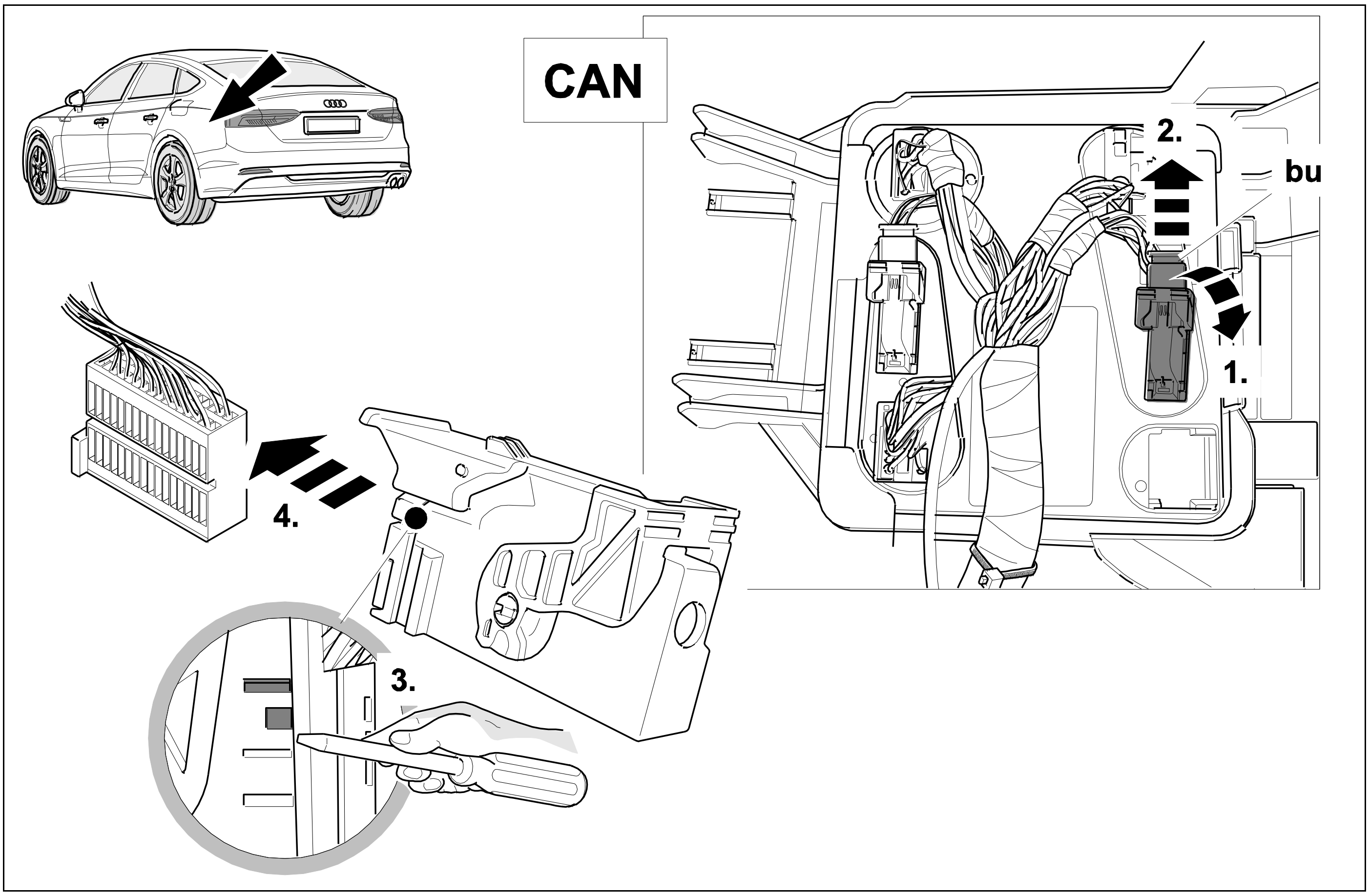

15 👁 ⇨ **9**

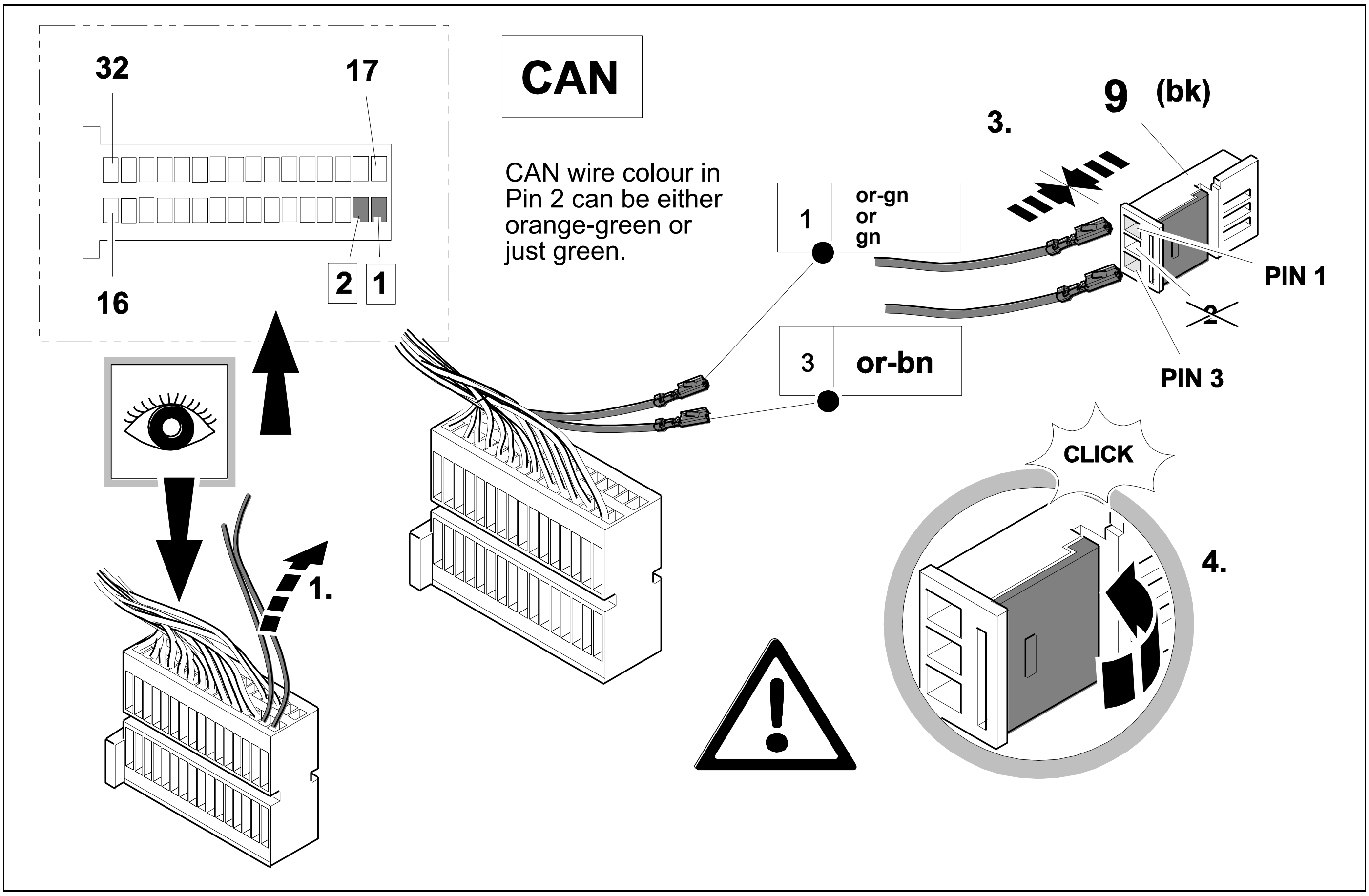
32
17
16
2
1
1.
CAN
9 (bk)
3.
1
or-gn
or
gn
3
or-bn
PIN 1
2
PIN 3
CLICK
4.

CAN wire colour in Pin 2 can be either orange-green or just green.

16 👁 ⇨ **9**

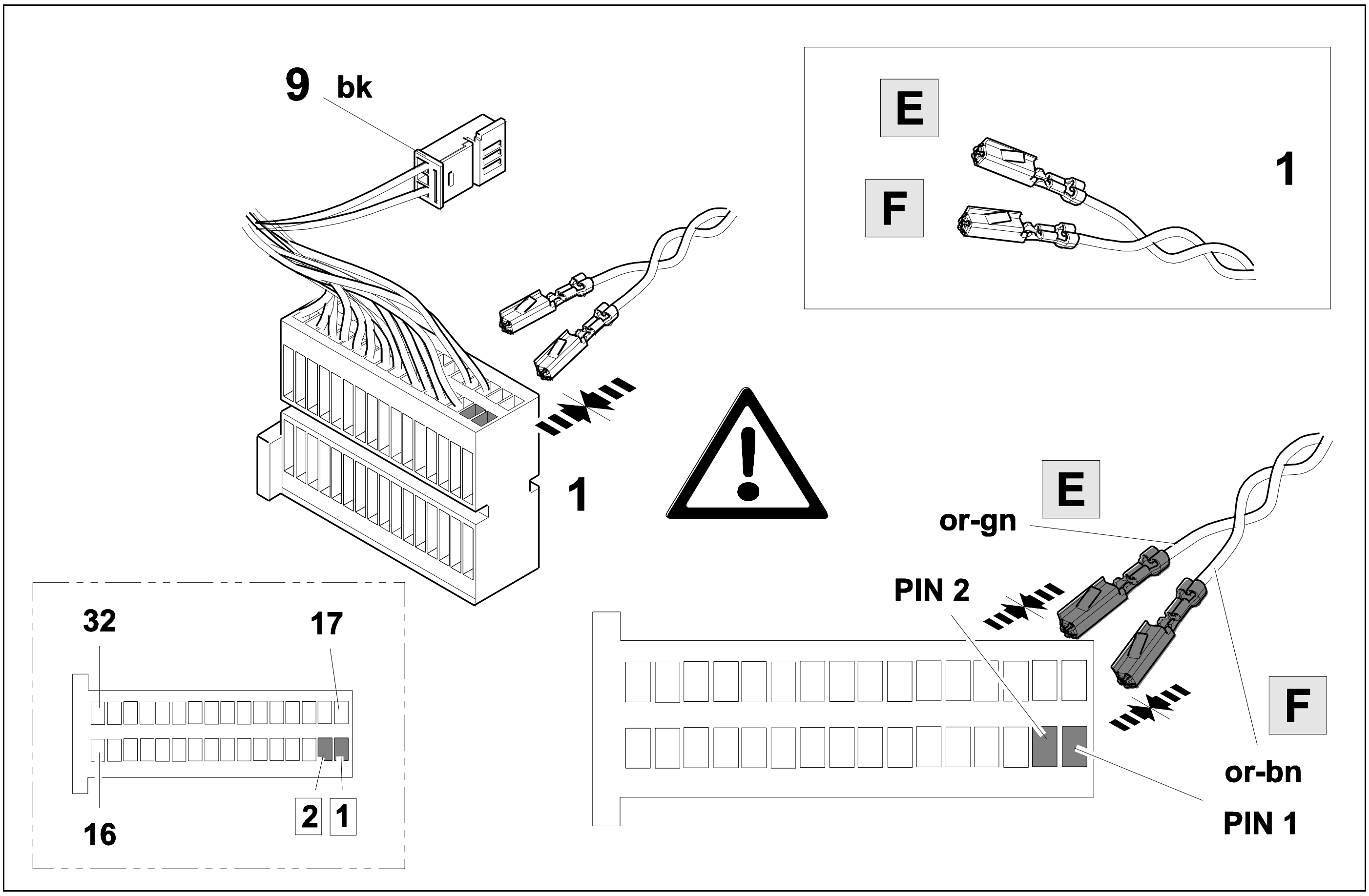
9 bk
E
F
1
1
E
or-gn
PIN 2
F
or-bn
PIN 1
32
17
16
2
1

17

👁 ⇨ **9**

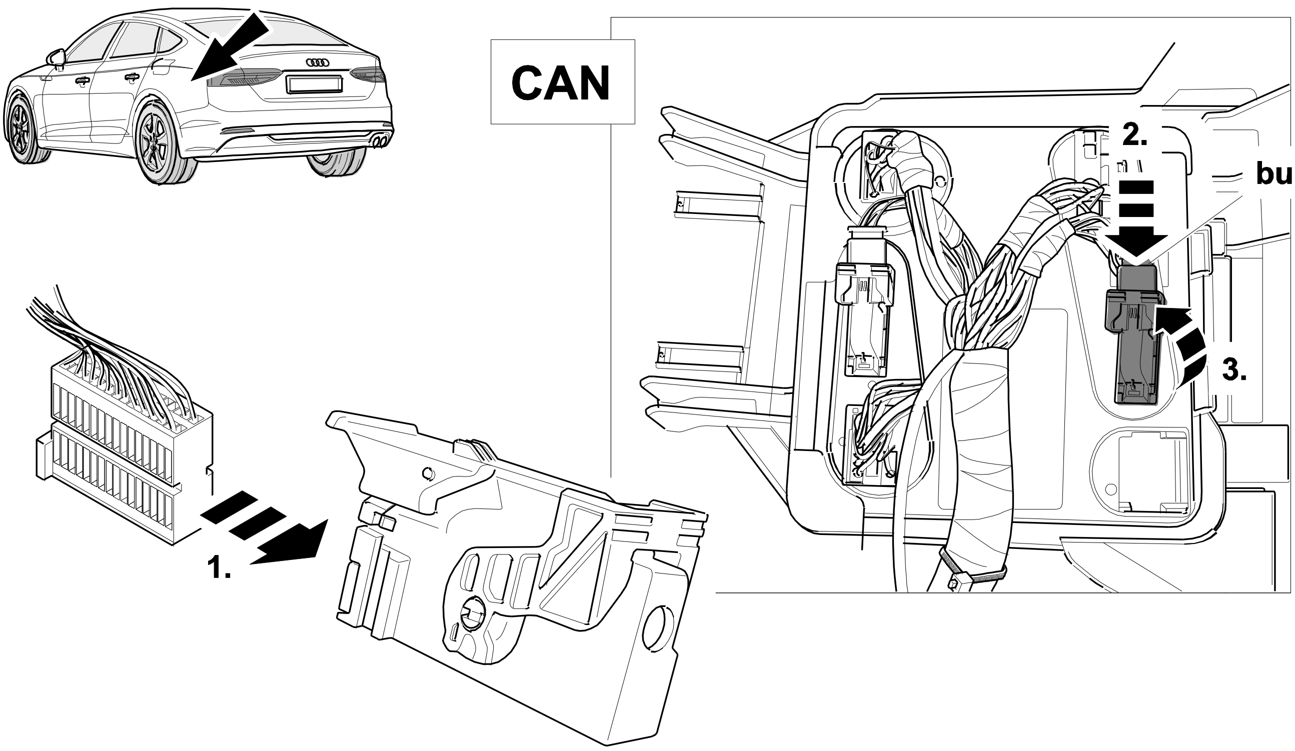

18

👁 ⇨ **9**

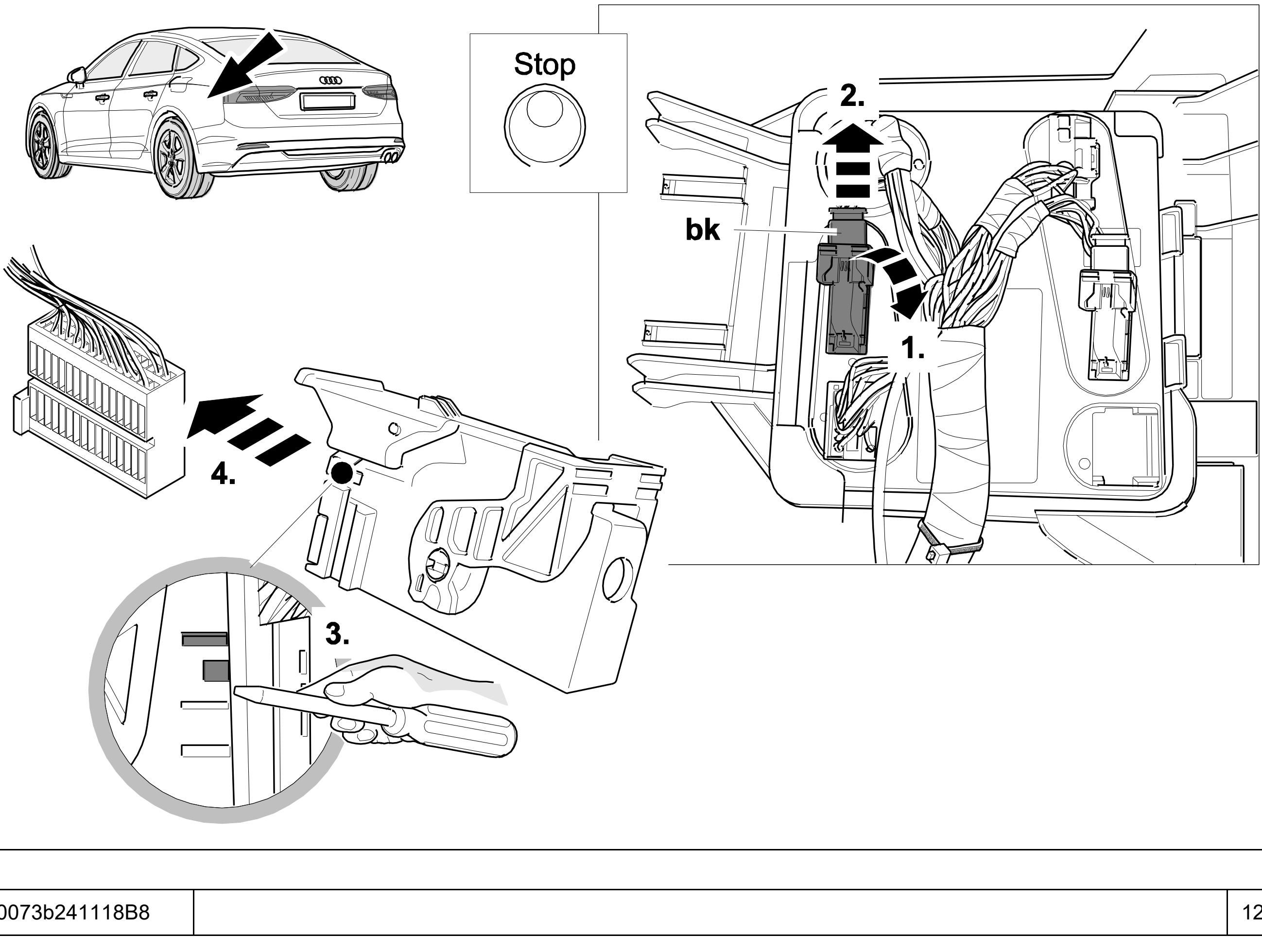

Stop
2.
bk
1.
4.
3.

19

👁 ⇨ 9

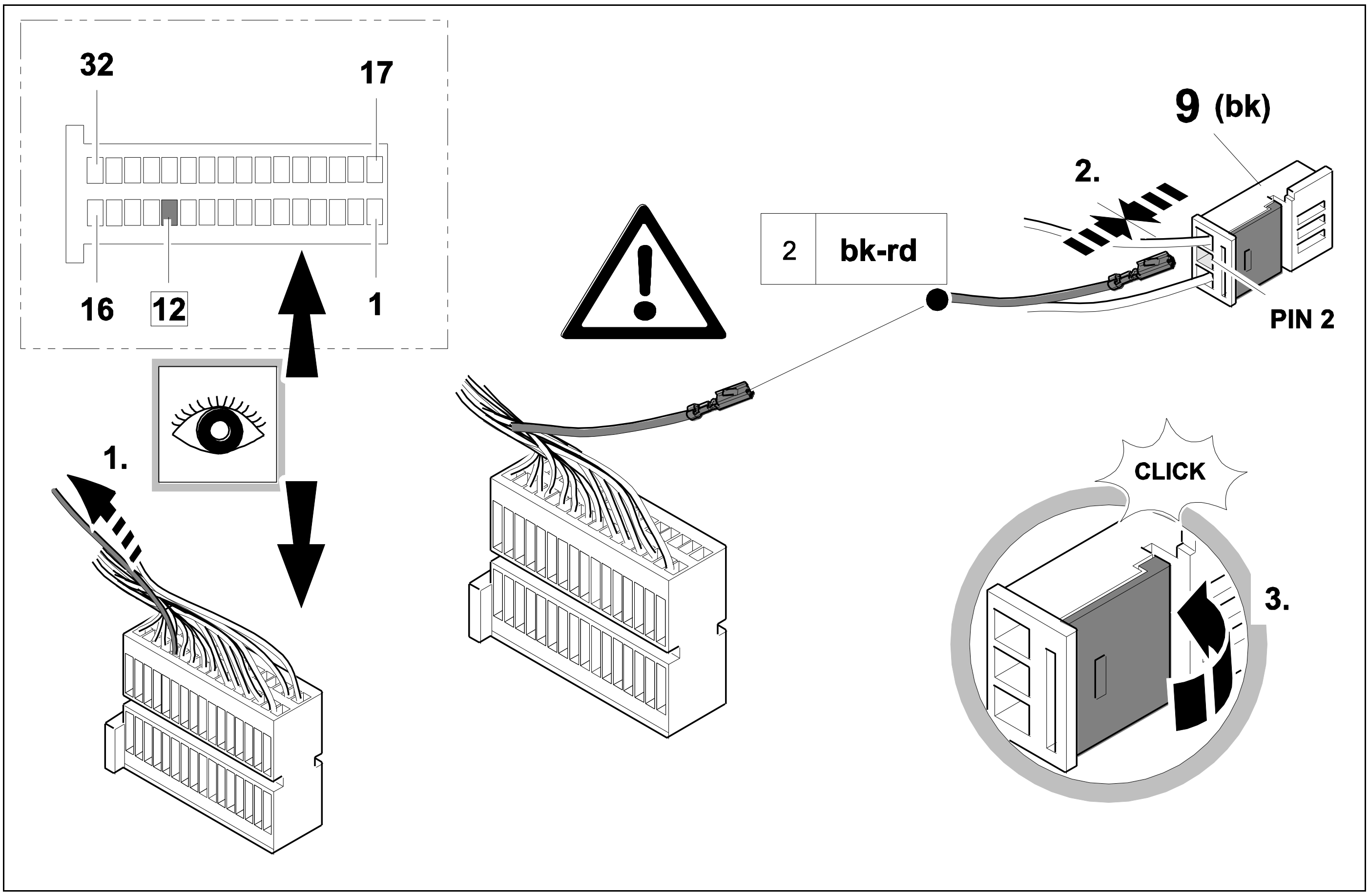
32
17
16
12
1
1.
9 (bk)
2.
2
bk-rd
PIN 2
CLICK
3.

20

👁 ⇨ 9

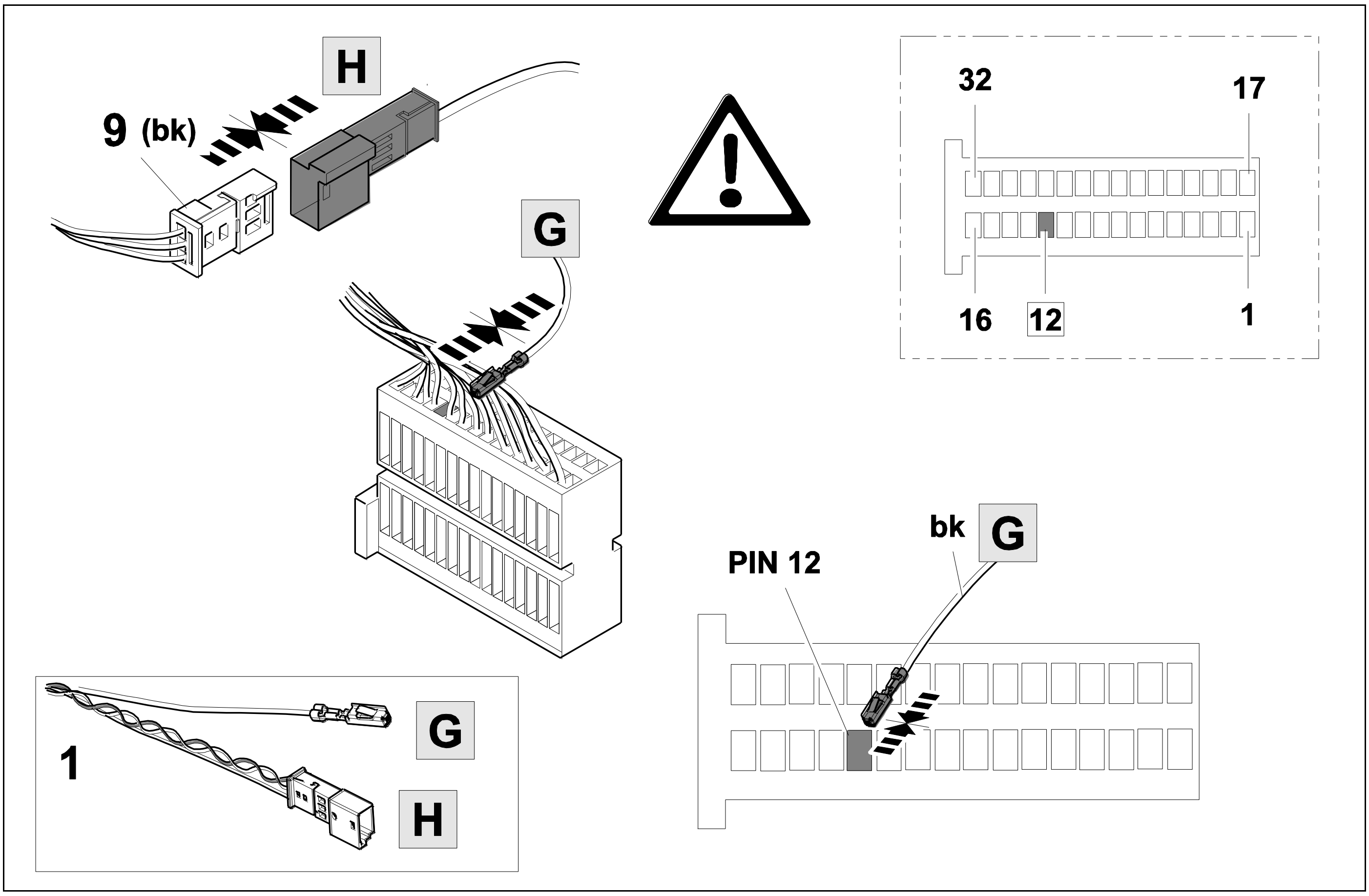
H
9 (bk)
G
32
17
16
12
1
bk
G
PIN 12
1
G
H

21

⇨ **9**

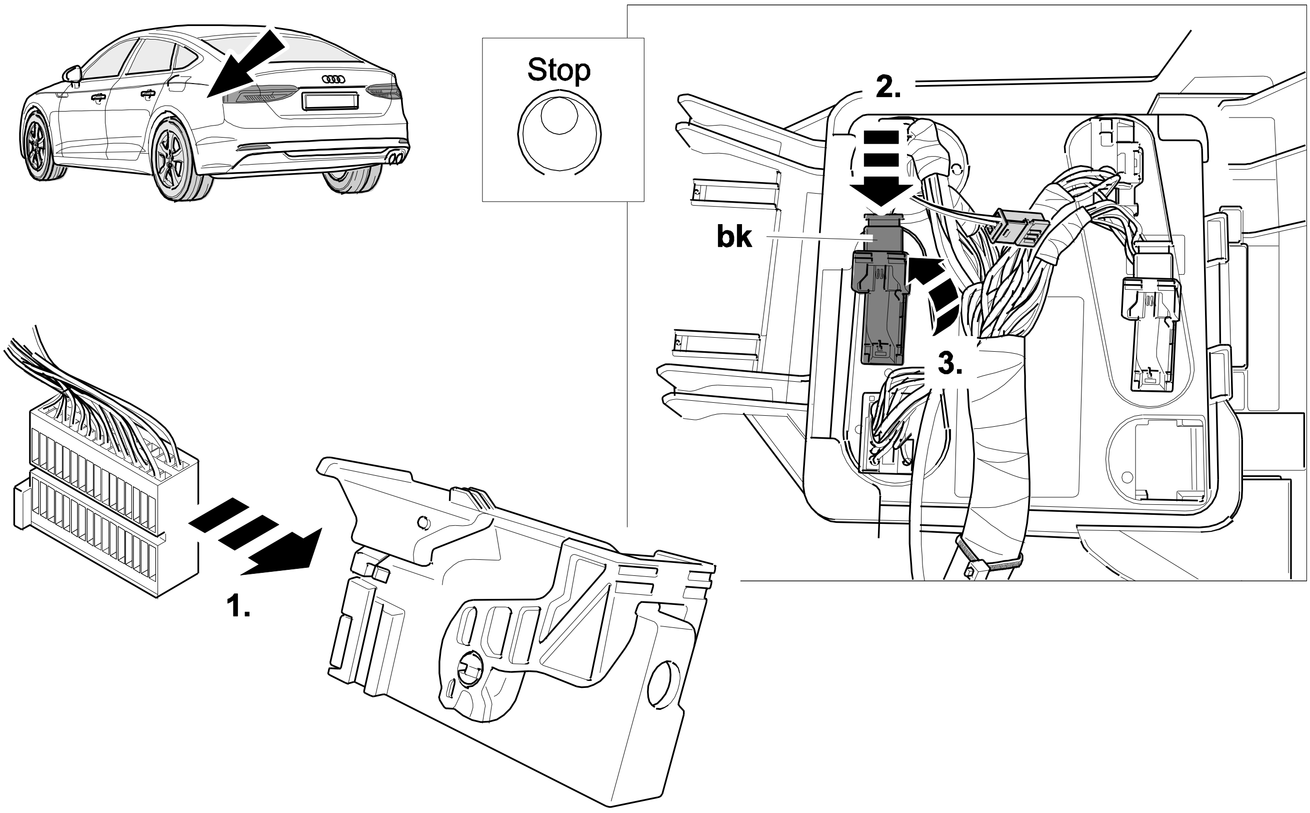

22 ⇨ **34**

Sportback

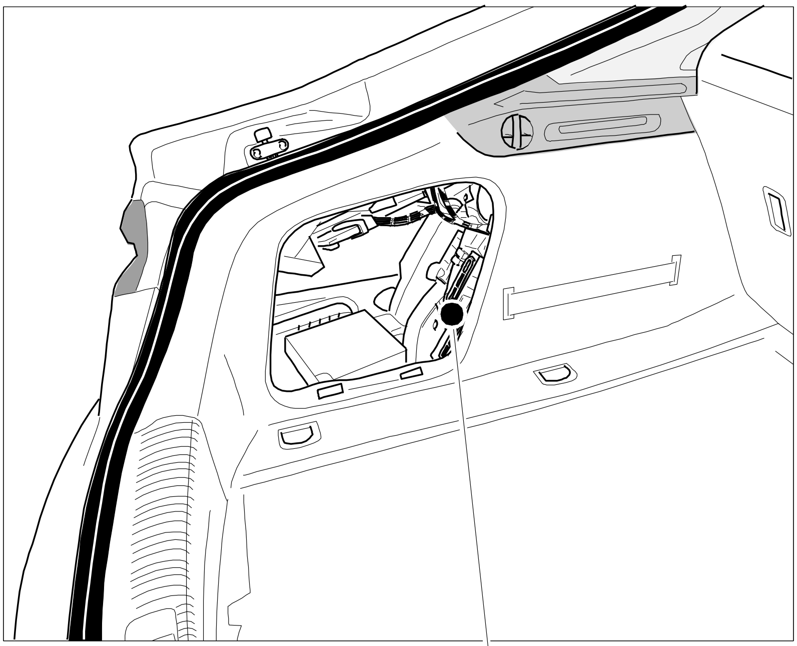

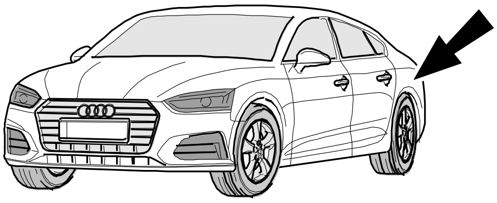

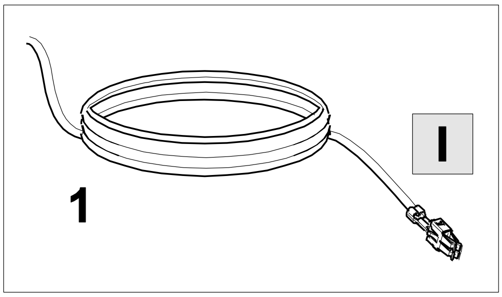

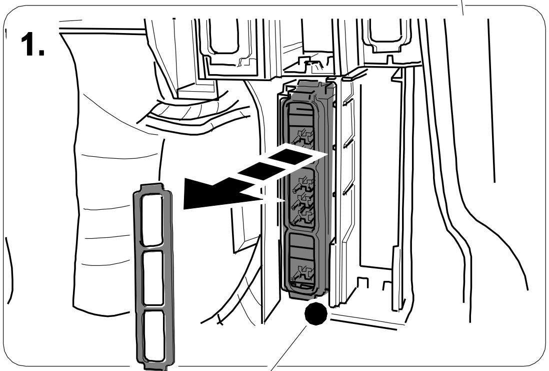

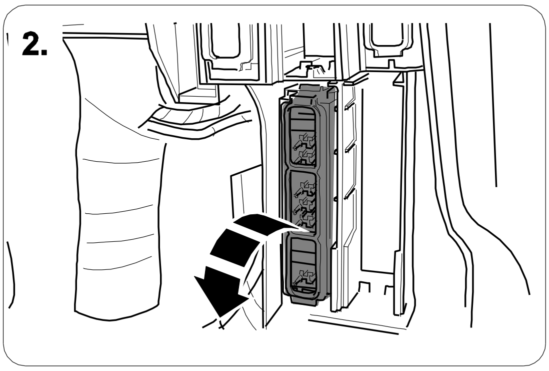

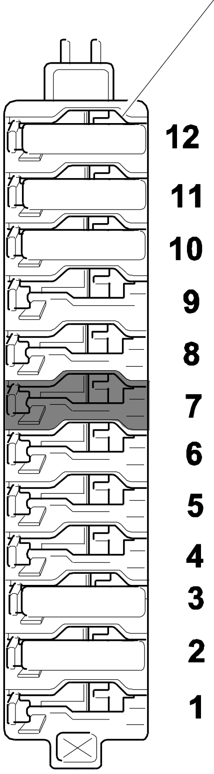
12
11
10
9
8
7
6
5
4
3
2
1

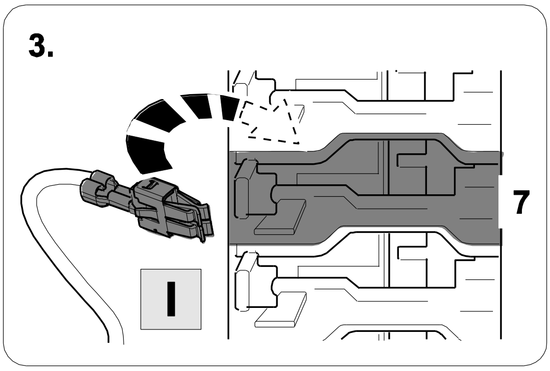

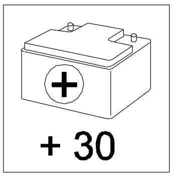

⚠

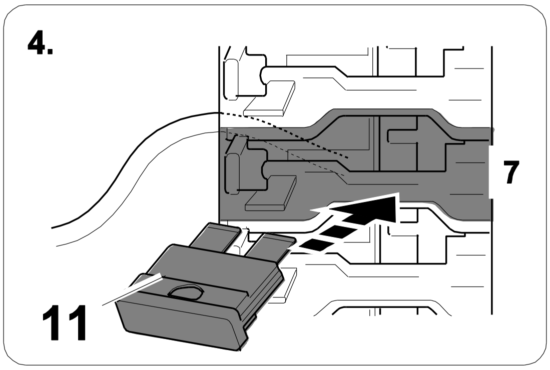

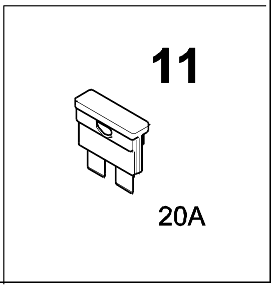

Coupe´

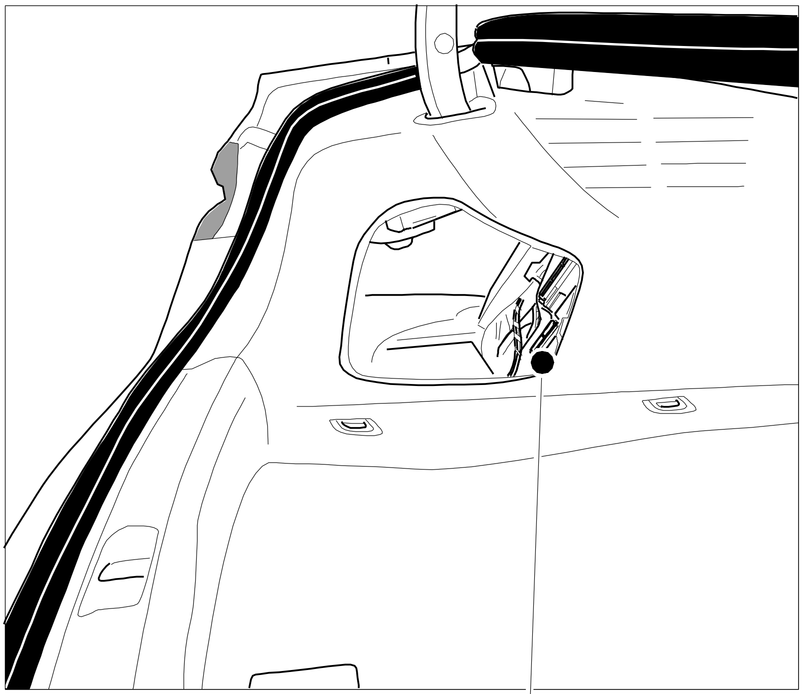

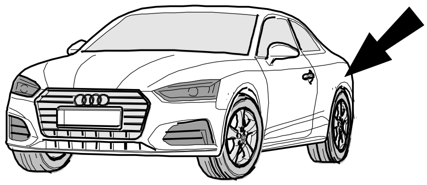

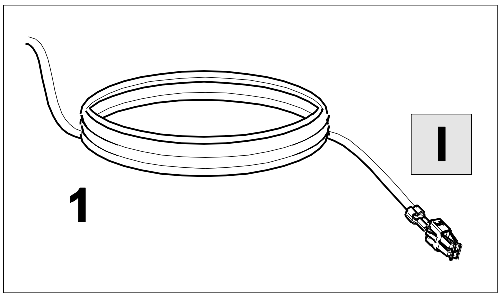

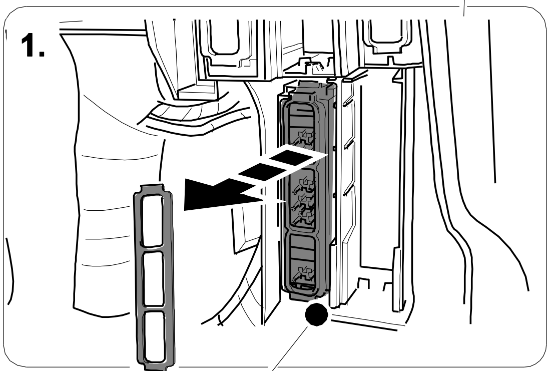

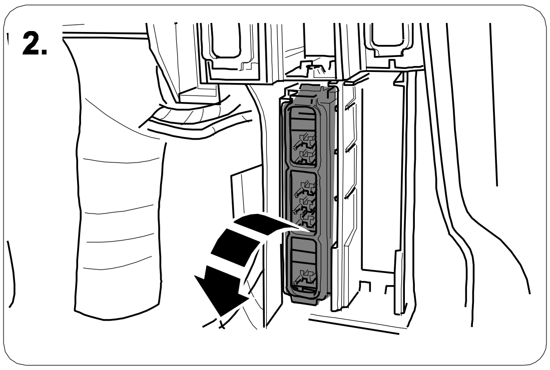

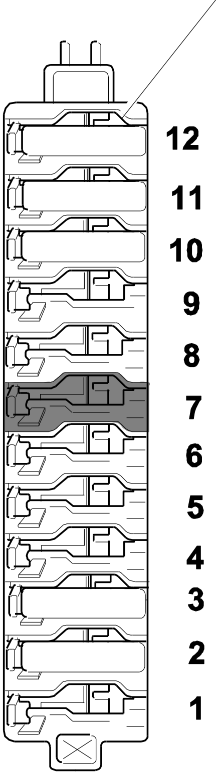
12
11
10
9
8
7
6
5
4
3
2
1

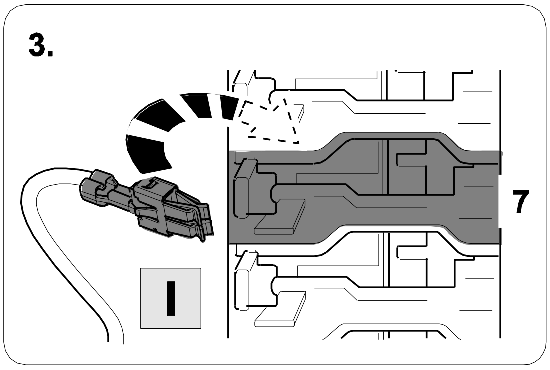

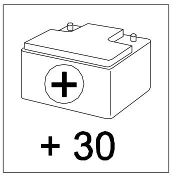

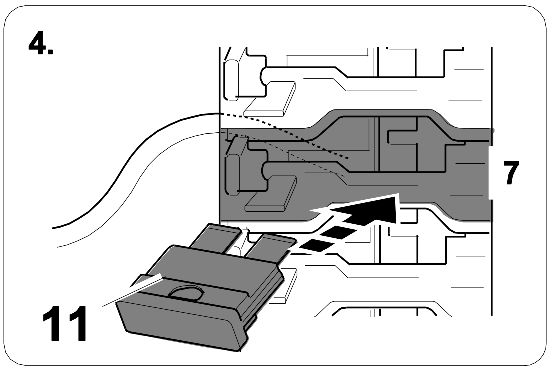

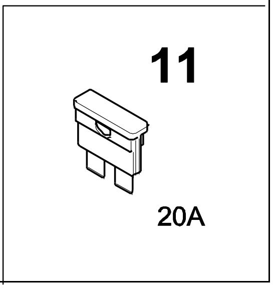

Cabrio

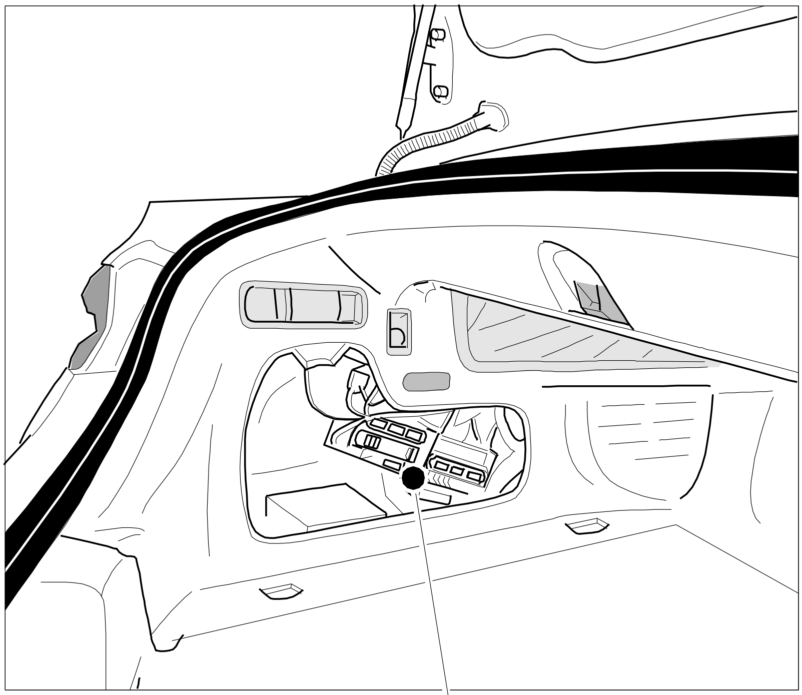

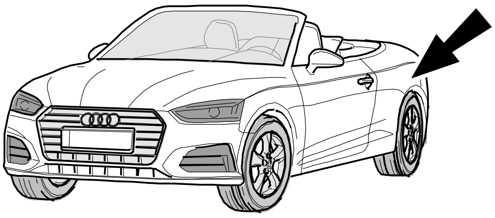

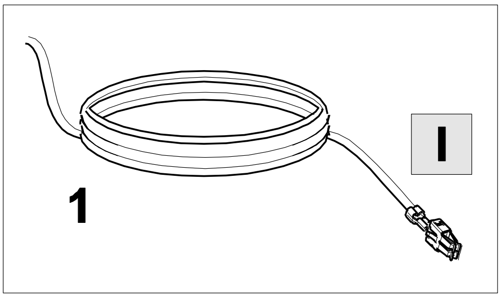

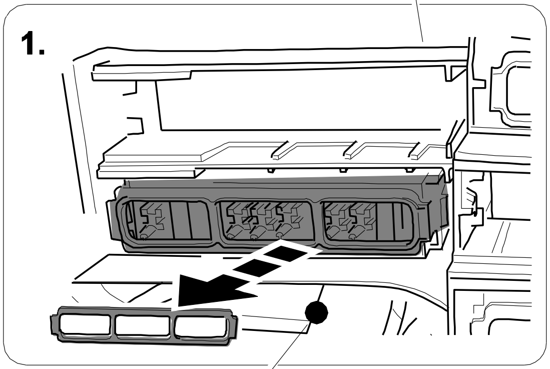

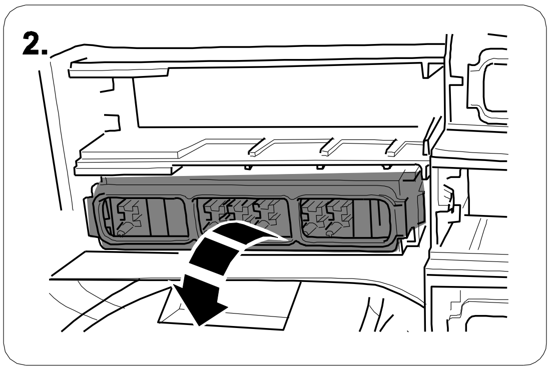

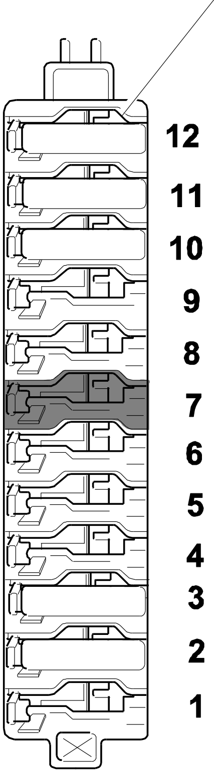
12
11
10
9
8
7
6
5
4
3
2
1

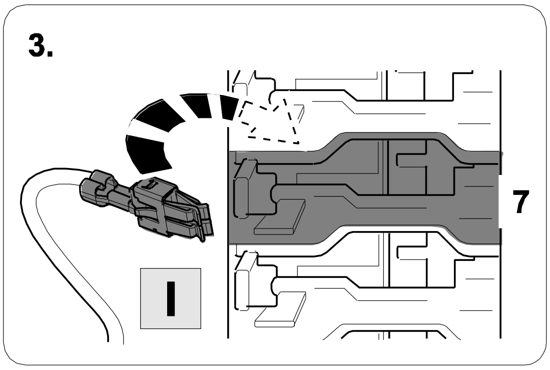

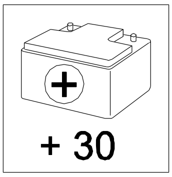

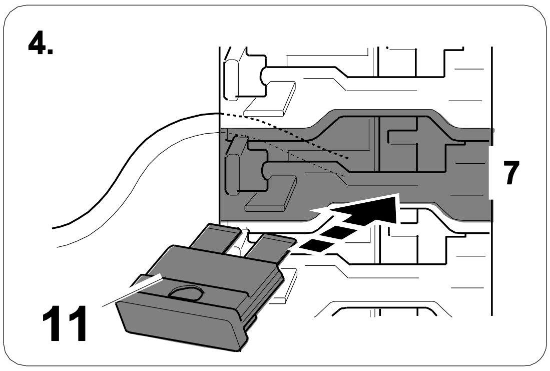

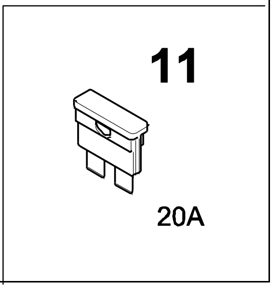

25

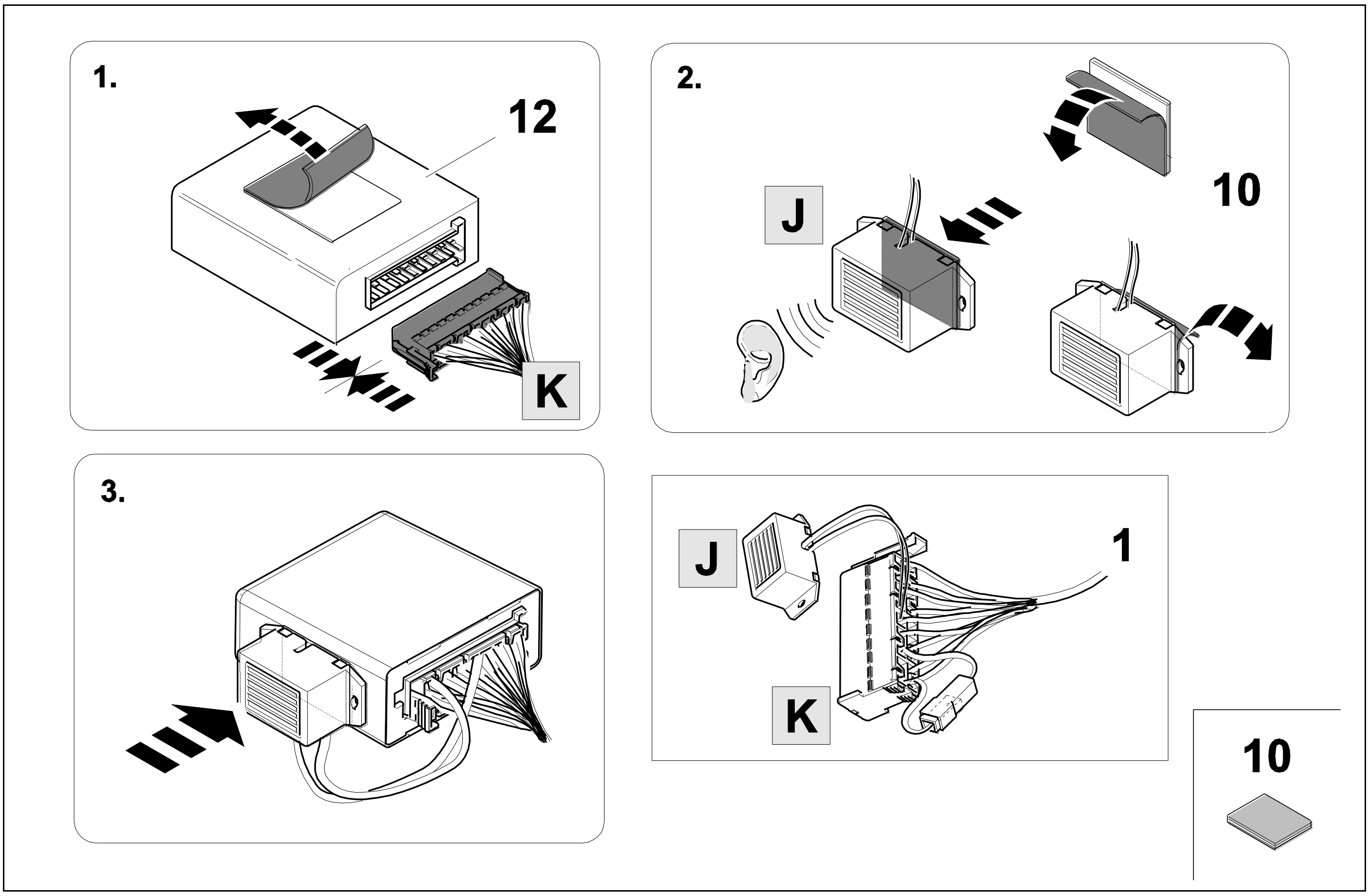
1.
12
K
2.
10
J
3.
J
1
K
10

26

Sportback

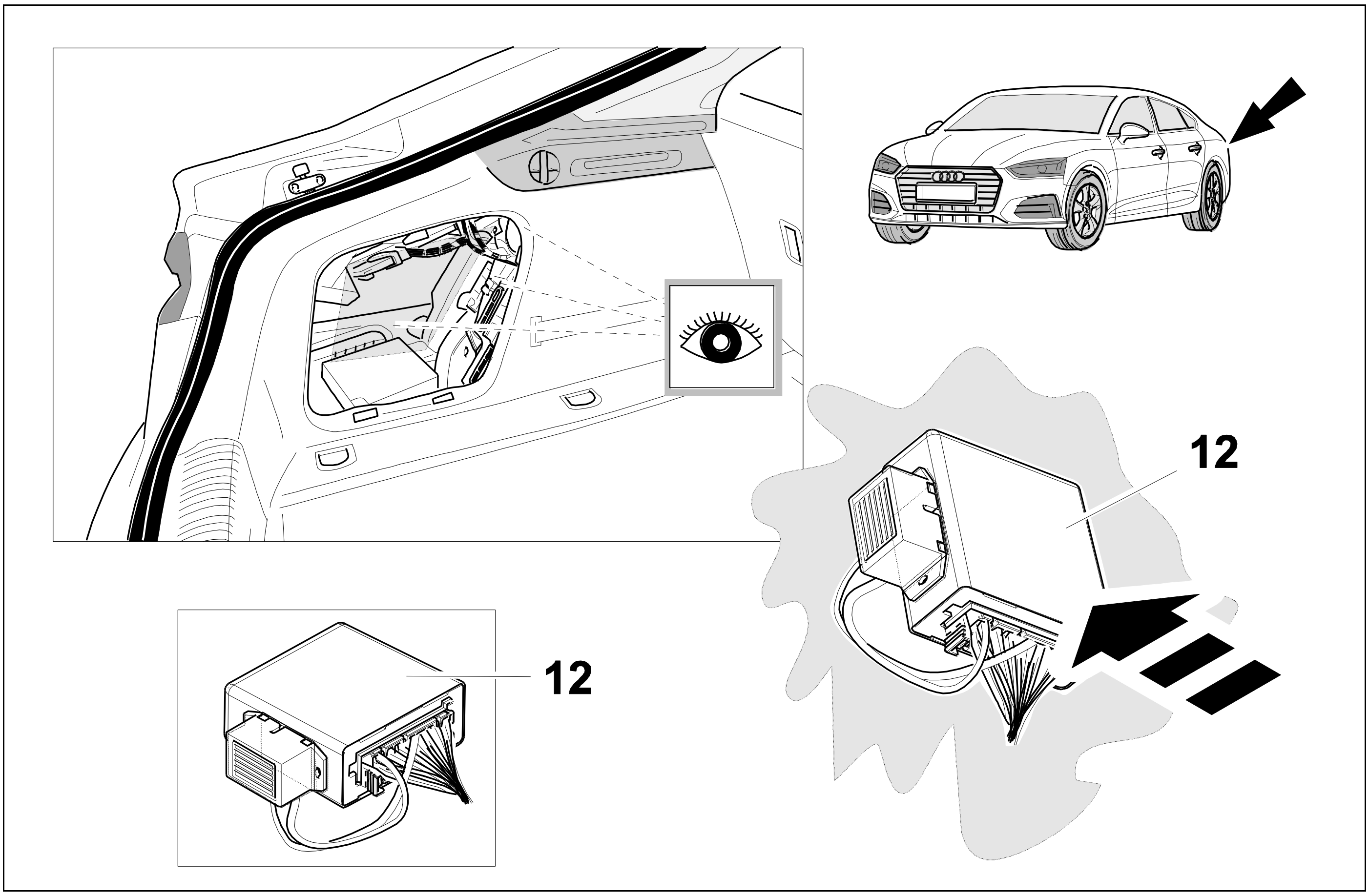

27

Coupe´

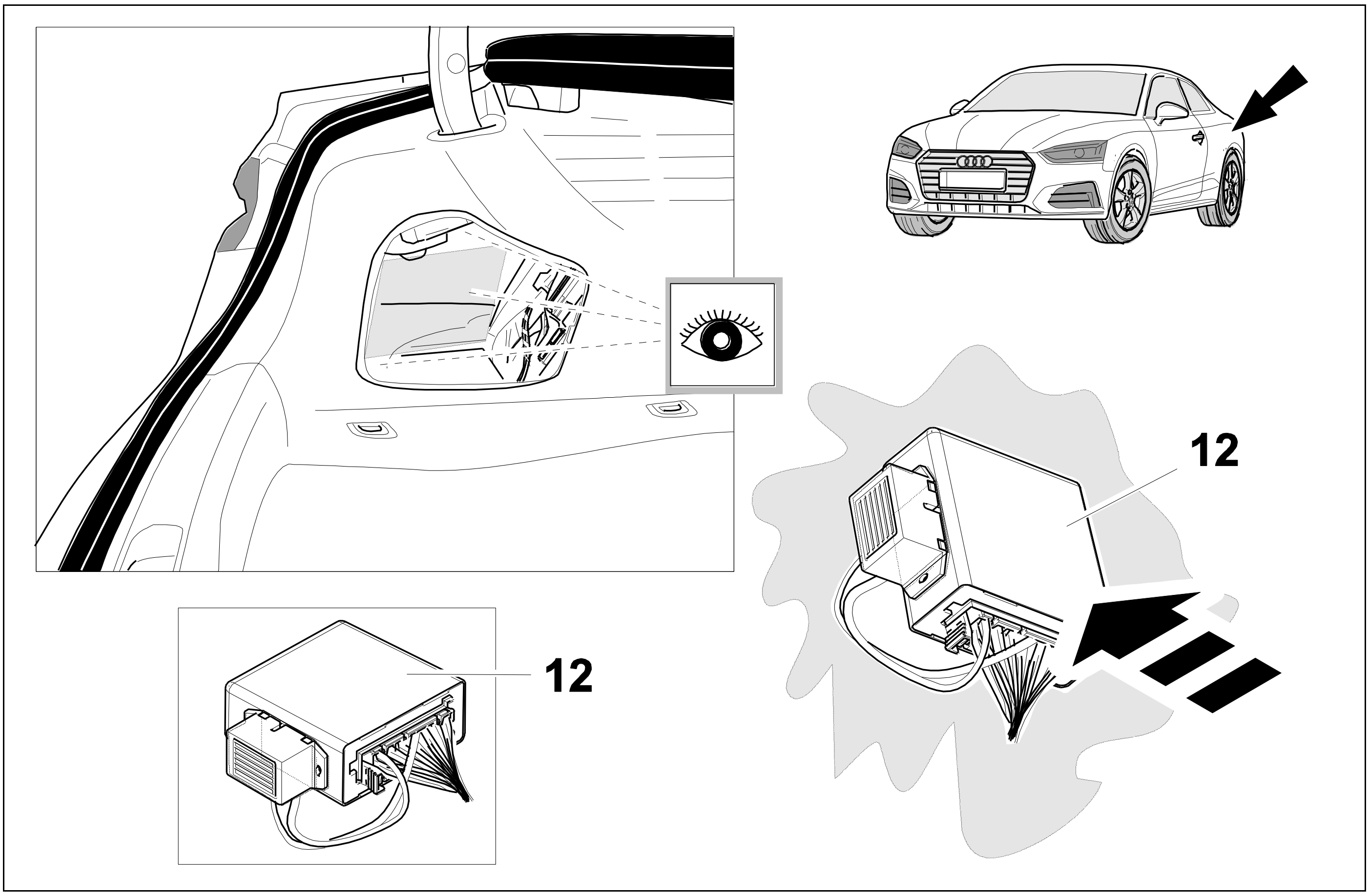

28

Cabrio

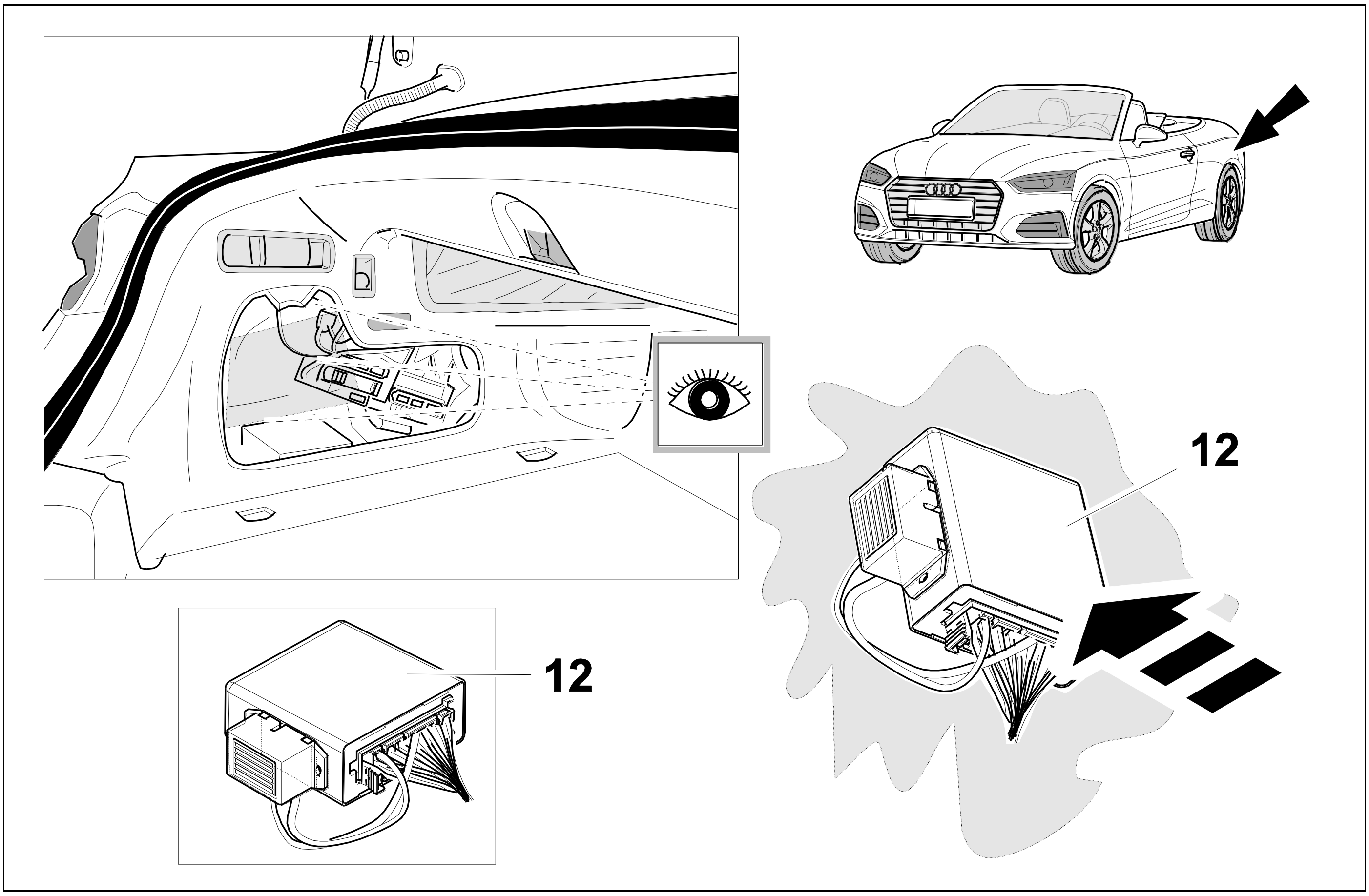

29

BRAKE CONTROLLER PREPARED

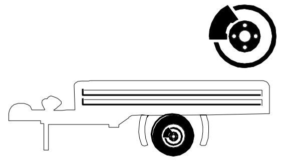

Trailer Brake Preparation

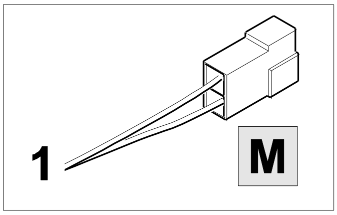

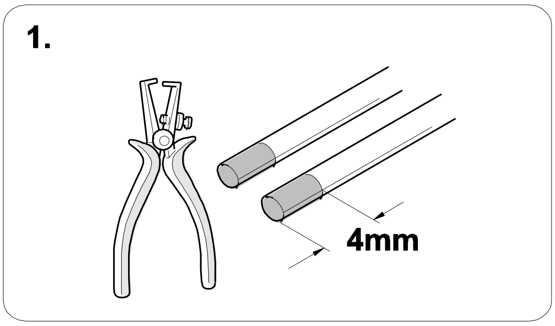

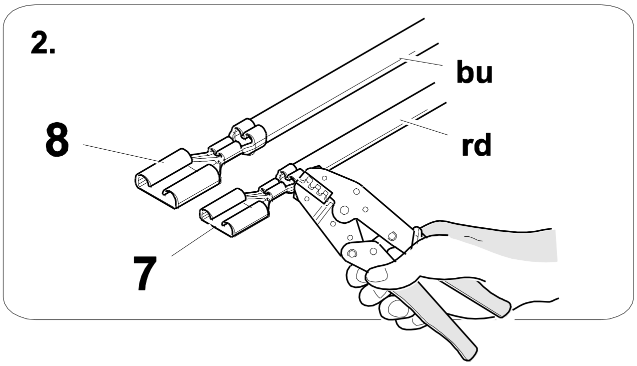

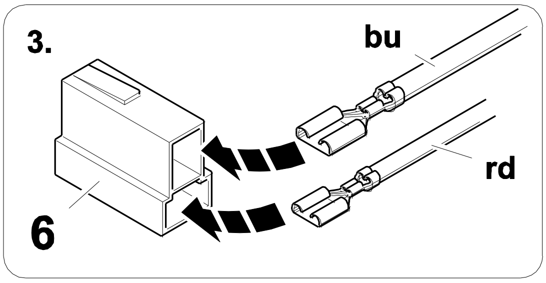

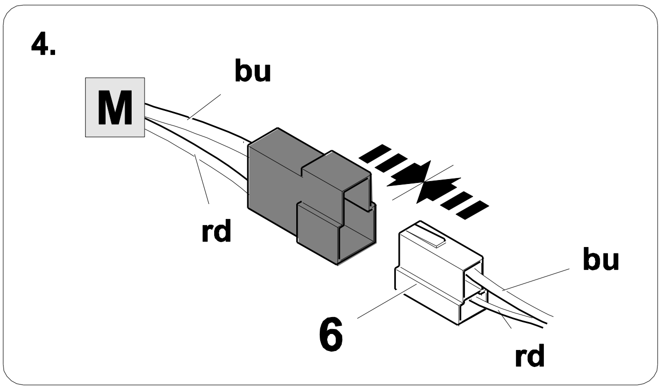
4.
M
bu
rd
bu
6
rd

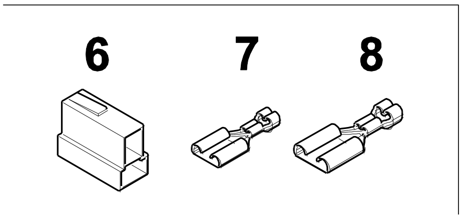

30

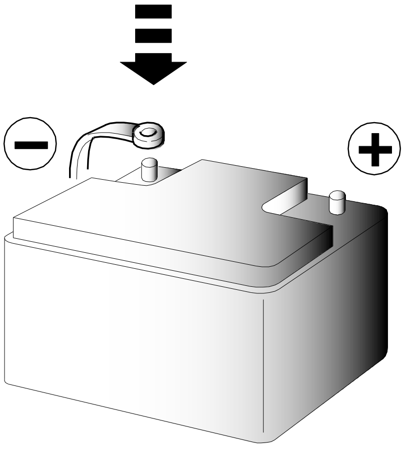

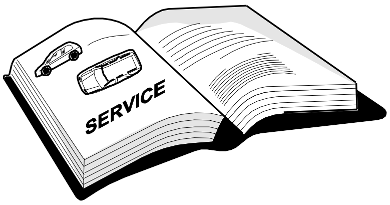

31

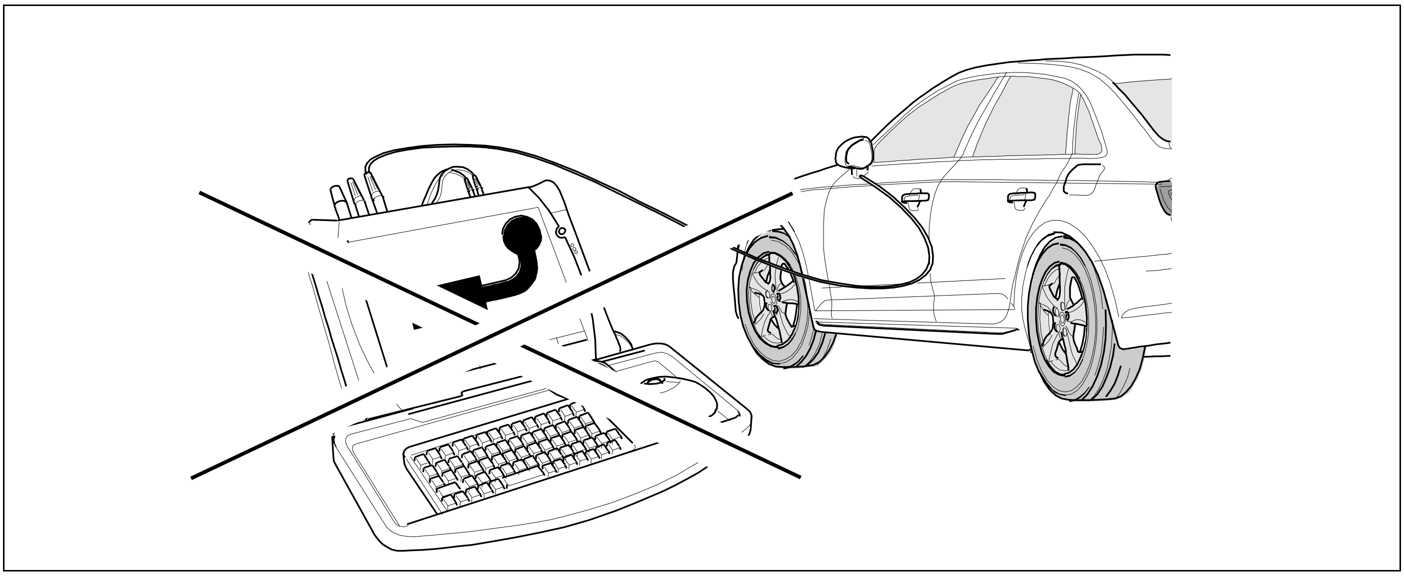

32 CHECK ALL LIGHTING FUNCTIONS

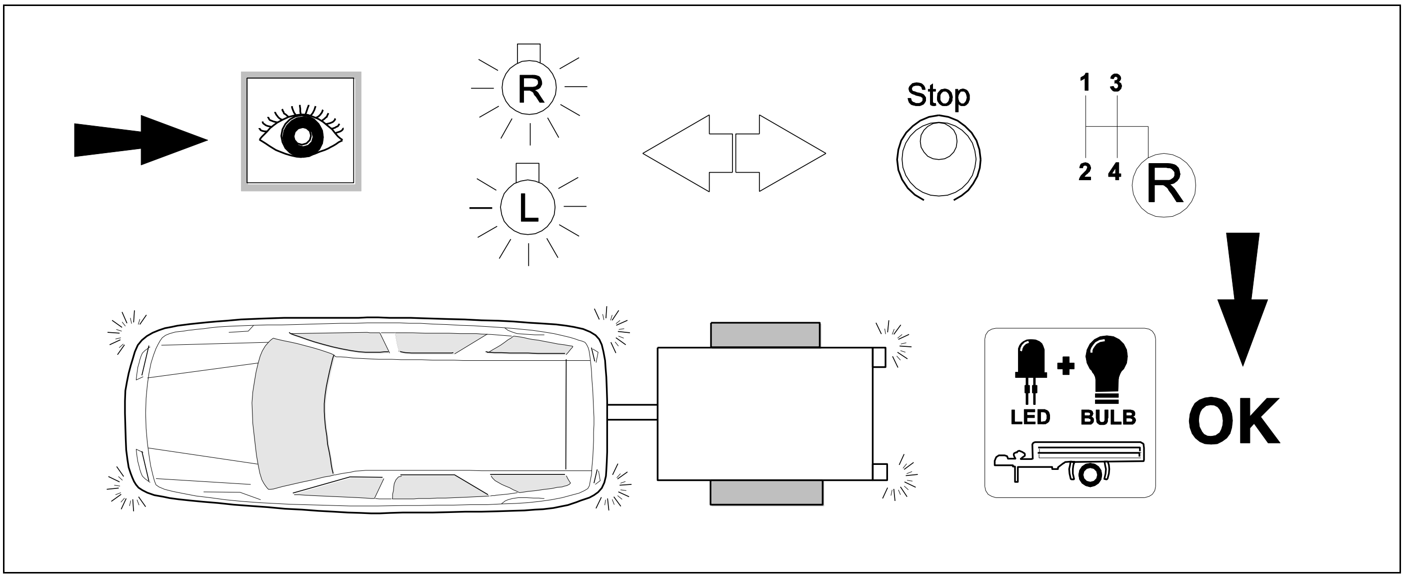
R
L
Stop
1 3
2 4
R
LED
BULB
OK

33 CHECK

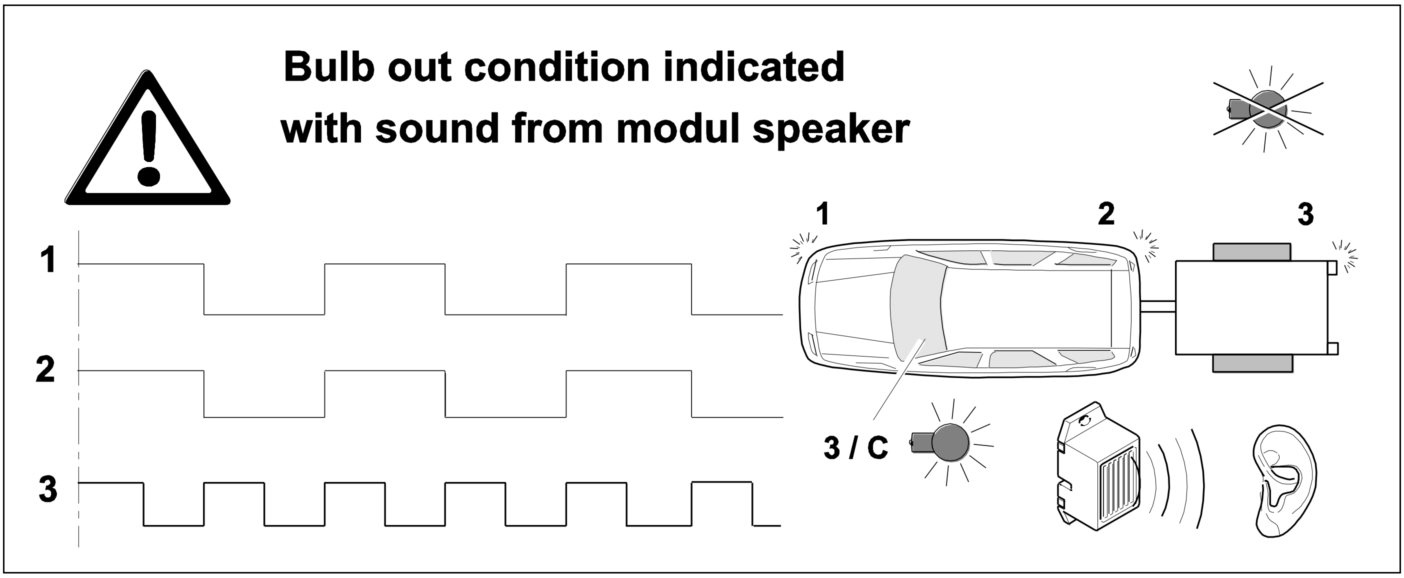

Bulb out condition indicated with sound from modul speaker

34

⇨ 22 - 24

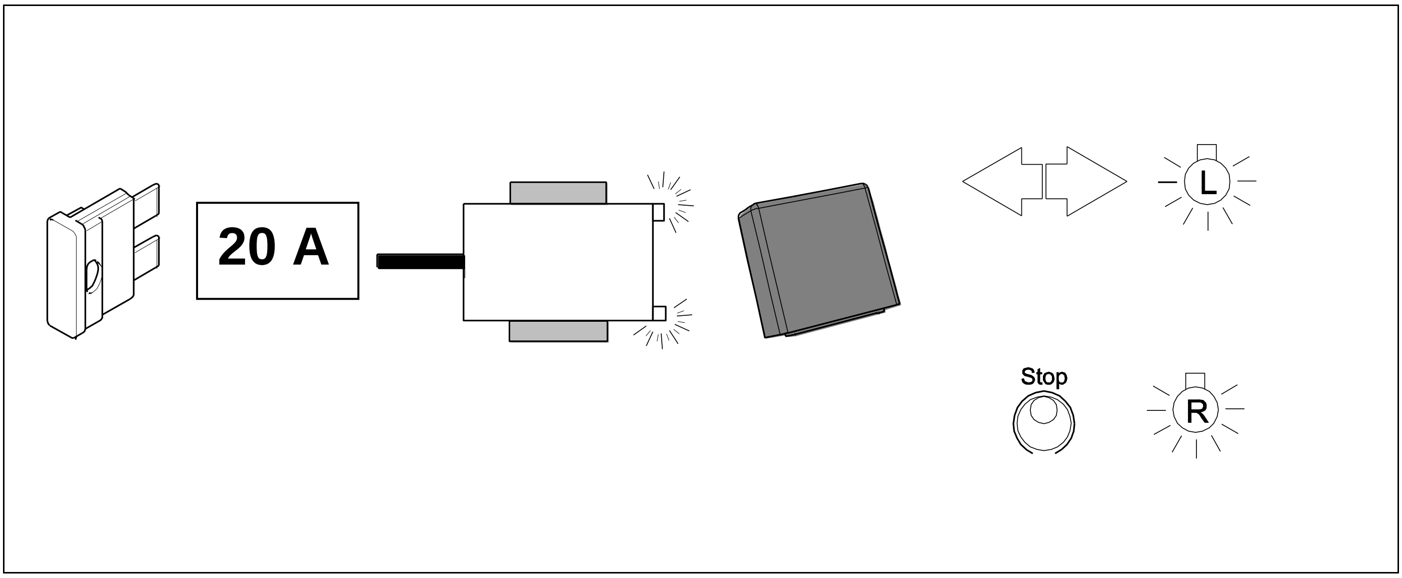

35 CODING OPTIONAL - SKIP THESE STEPS IF CODING OF THE VEHICLE IS NOT PLANNED

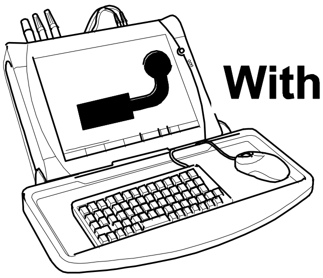

With vehicle coding !

36 ⇨ 40

!Attention!

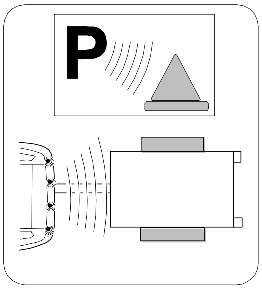

TSP
Trailer
Stability
Program

P
Trailer
Assistent

These codings may be lost
after visiting an authorized workshop !

Unless you have your own coding tool and are experienced with coding Audi vehicles, do not attempt coding.
DO NOT take it to an Audi dealer to code. They can only code their own factory kits as it requires a special one-use only unlocking code.

36 OPTION vehicle coding Sportback

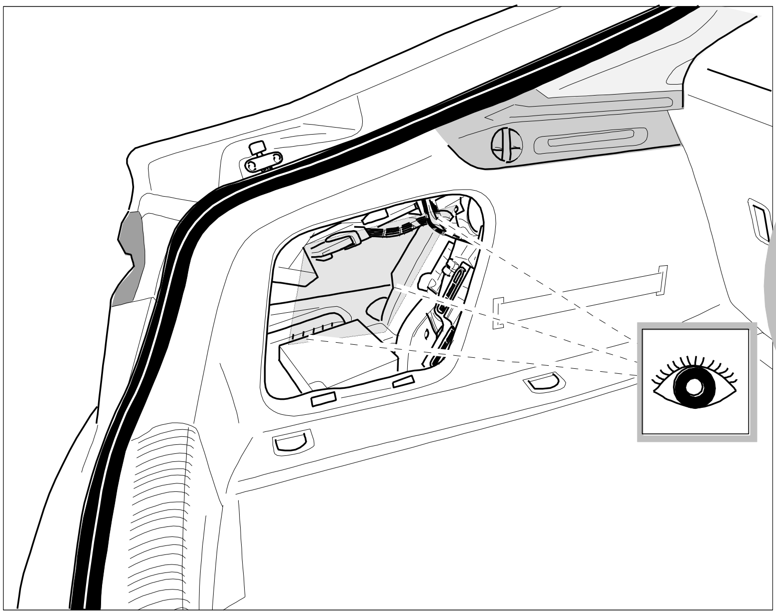

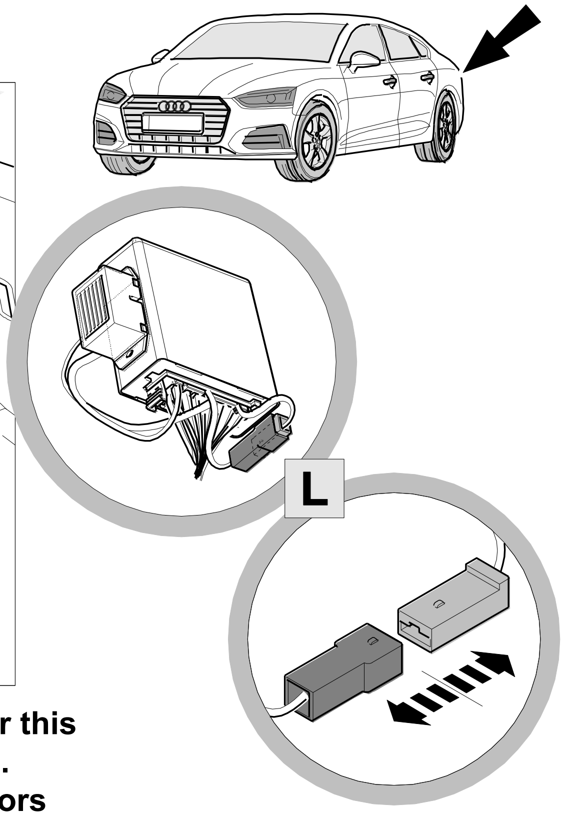

DO NOT disconnect unless coding is planned for this vehicle as errors will appear on the vehicle dash. Plug back in and cycle ignition twice to clear errors

37 OPTION vehicle coding Coupe´

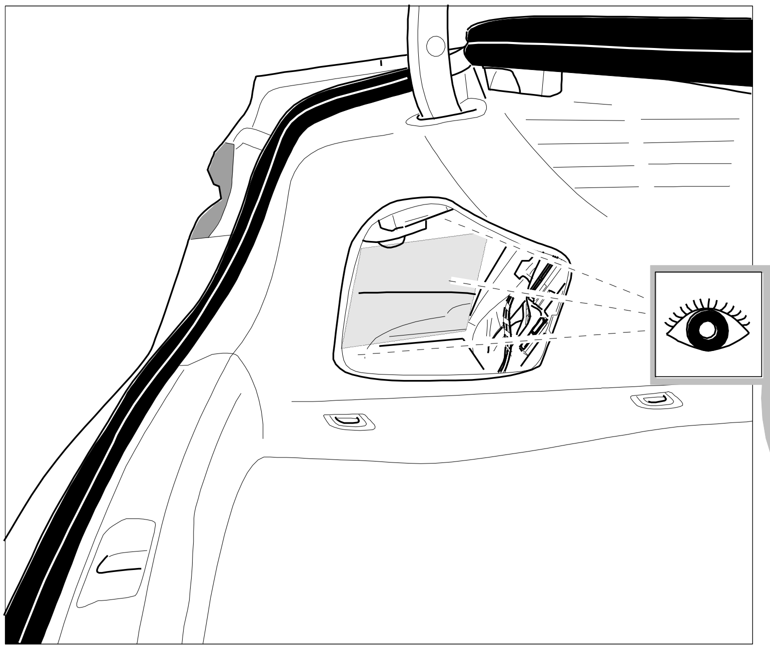

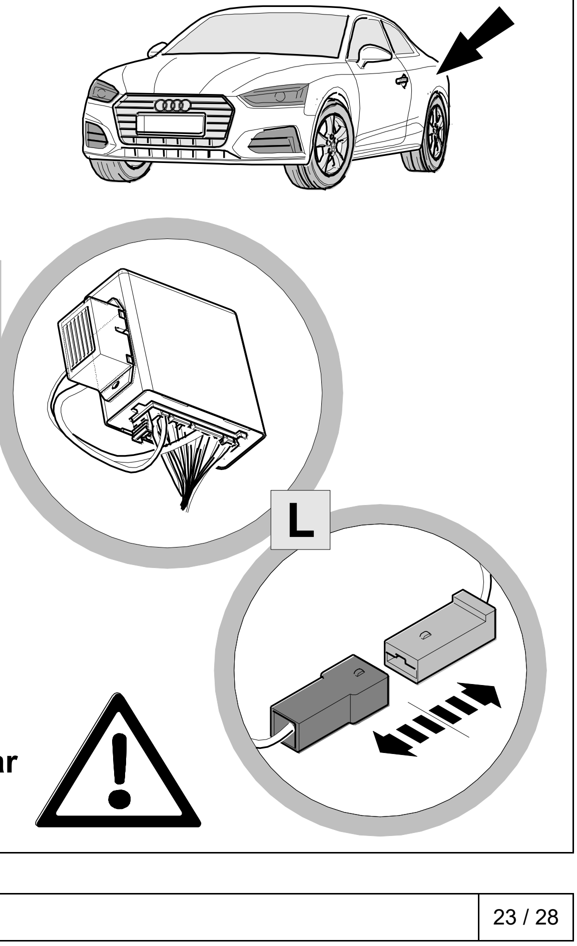

DO NOT disconnect unless coding is planned for this vehicle as errors will appear on the vehicle dash. Plug back in and cycle ignition twice to clear errors

38 OPTION vehicle coding Cabrio

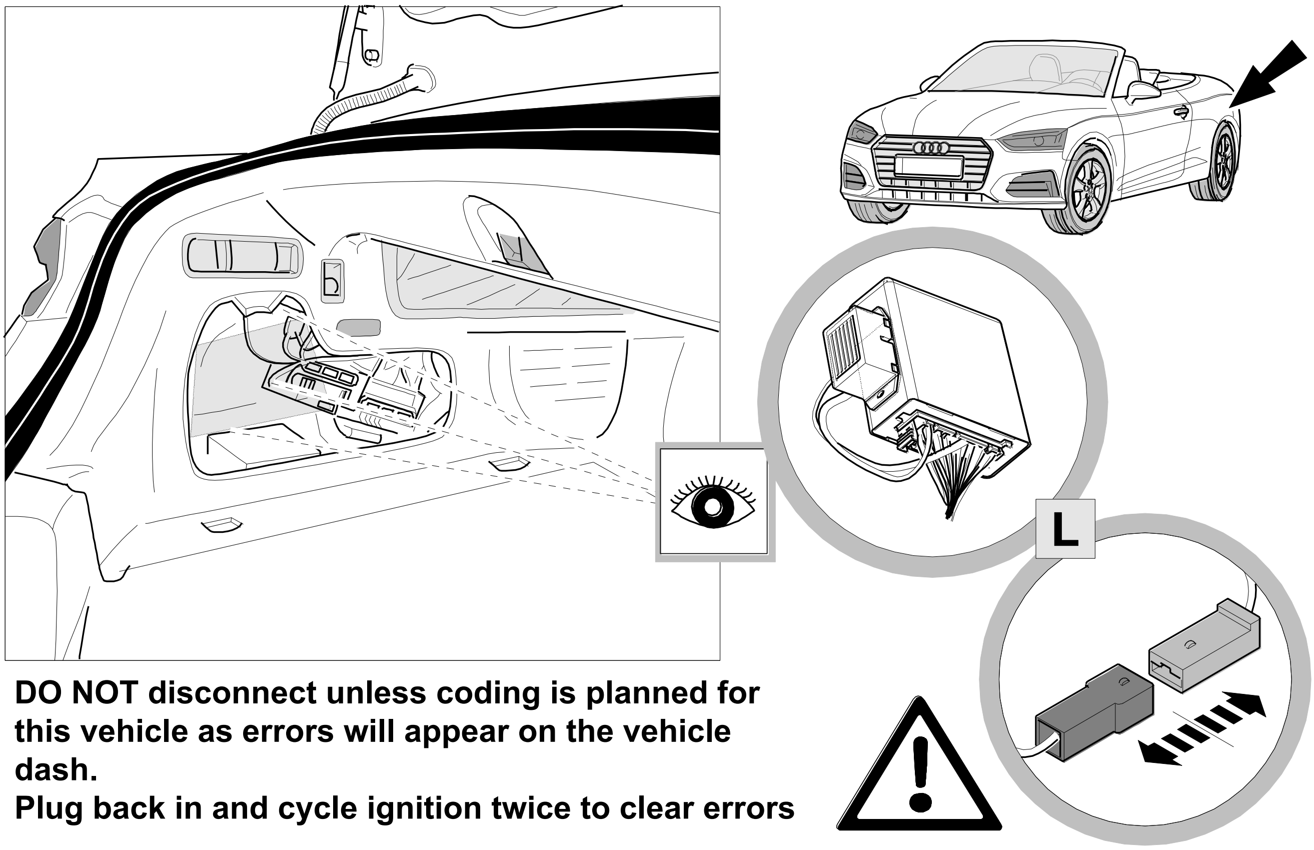

DO NOT disconnect unless coding is planned for this vehicle as errors will appear on the vehicle dash.

Plug back in and cycle ignition twice to clear errors

39

OPTION vehicle coding

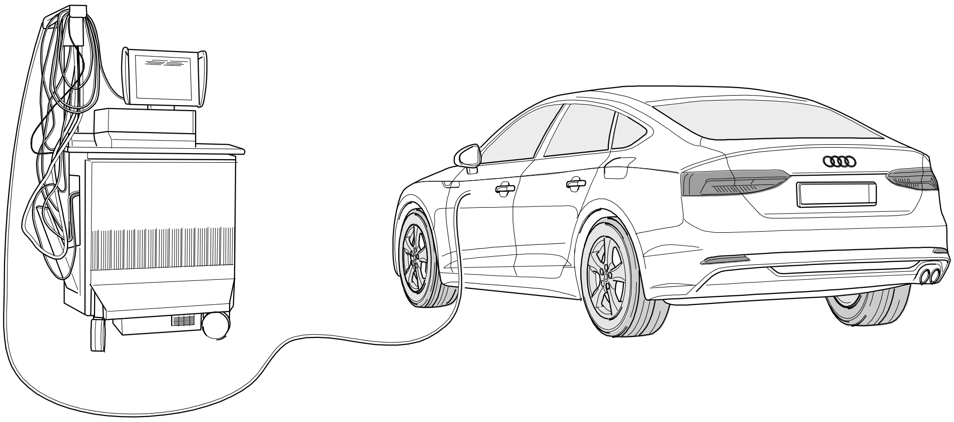

Coding with VCDS, please note: GB

The procedure described below for encoding and enabling the trailer mode only serves for a general orientation and can vary greatly depending on the model (motorisation / equipment). If necessary less or further control units will have to be adapted.

- **After connecting to VCDS, the "69 trailer function" controller** has to be set to encoded **in the _19 installation list.**
- **Coding EZE_09**
  (electronic central electric controller; Login 31347)
  Diagnosis / Networking plan / Controller self-diagnosis encode hitch_ecu > installed Vehicles from (MJ 2017>>) adjustment > channel -integration trailer control unit > installed
- **Coding ZKS_46 (Central module convenience system)**
  trailer monitoring > put on active trailer control unit > installed
- **Coding_03 (Brake Electronics; Login 61378)**
  Adjustment > channel - trailer stabilization, change value to > active
- **Encoding SWA_3C (Lane Change Assist)**
  ECU for draw bar > with ECU for draw bar
- **Encoding SCH_ 17 (Dash panel insert)**
  Trailer > yes
- **Encoding RFK_6C (reverse camera system)**
  equipment_ahk > installed
- **Encoding STF_74 (chassis control system)**
  Trailer > installed
- **Encoding EPH_76 (PDC controller)**
  Trailer > trailer device can be removed manually
- **Encoding DiS_13 (controler distance control, possible Login 20103)**
  Control module for towing sens > installed or Control module for trailer recognition > installed (Byte 03 Bit 03)
- **Encoding FFF_A5 (front sensor system controller)**
  AAG > coded
- **Encoding HDE_6D (boot lid electronics controller)**
  Trailer > installed

Important note on encoding and activating in trailer mode

The aforementioned settings are carried out in the vehicle's electrical system and saved locally. During general updates for the vehicle software (for example, within the scope of service or repair work) the settings may be overwritten and deleted under certain circumstances. At this case, the trailer mode activation has to be updated again locally after the update. Diagnostic information relating to the trailer mode that may appear during variance comparisons with the data saved in the manufacturer's works, may form the basis of the local activation

40

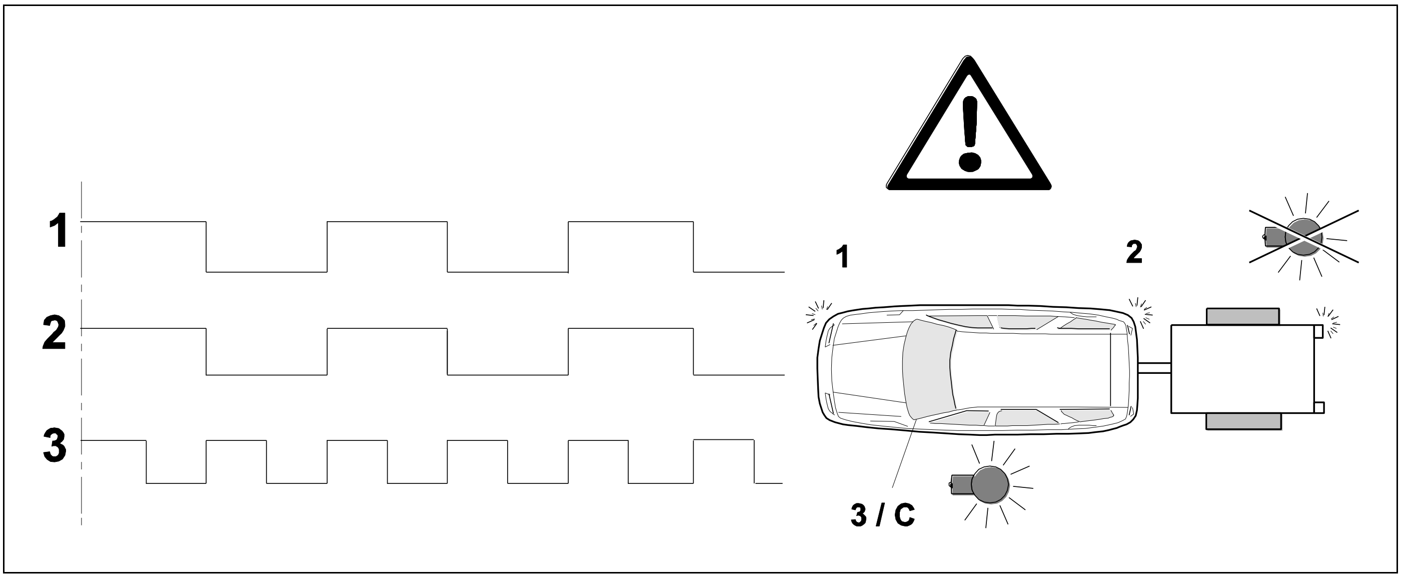
3 / C

41

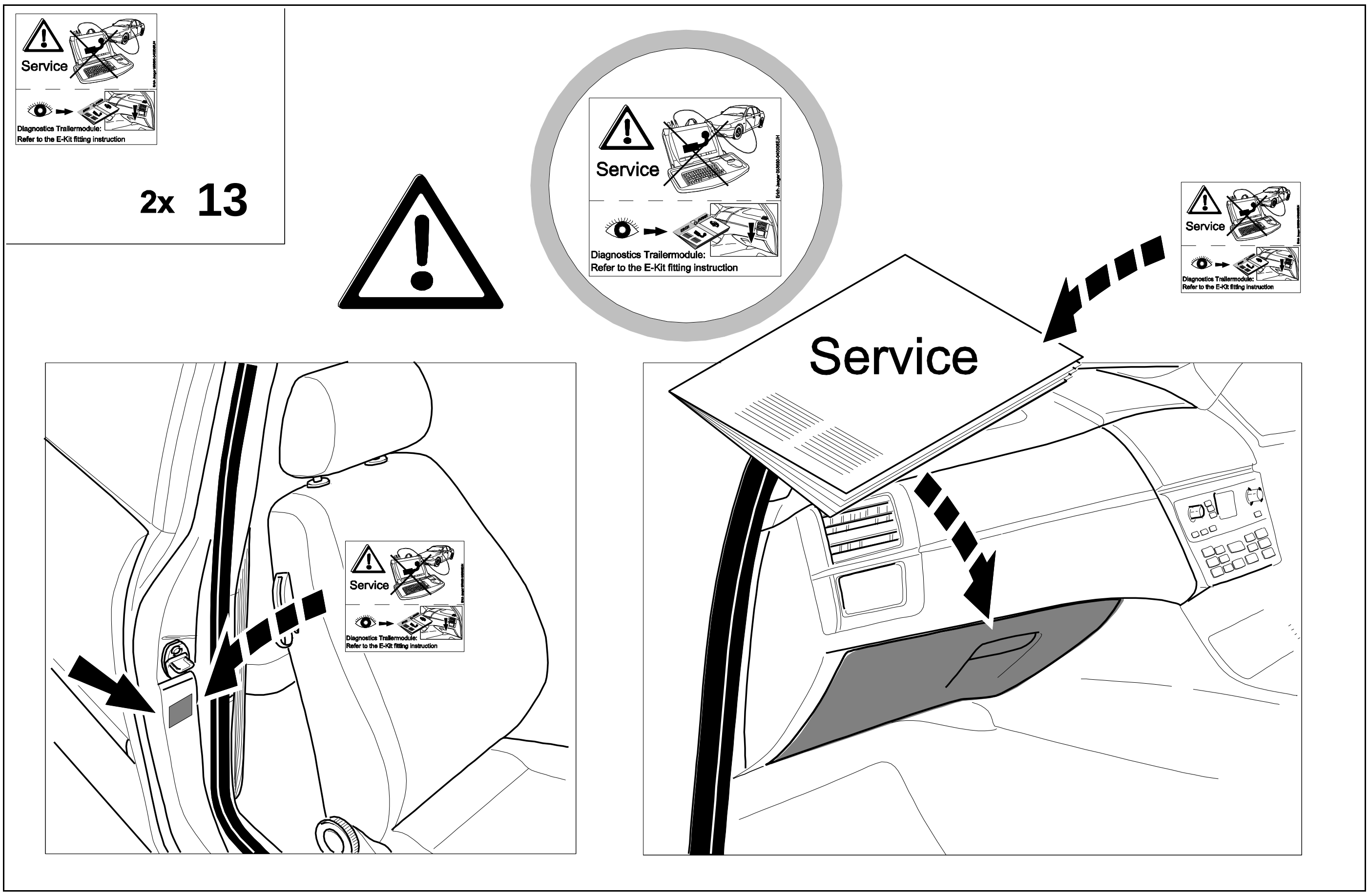
Service
Diagnostics Trailermodule:
Refer to the E-Kit fitting instruction
2x 13
Service
Diagnostics Trailermodule:
Refer to the E-Kit fitting instruction
Service
Diagnostics Trailermodule:
Refer to the E-Kit fitting instruction
Service
Diagnostics Trailermodule:
Refer to the E-Kit fitting instruction
Service

Status LED for self-diagnosis

Operation Support

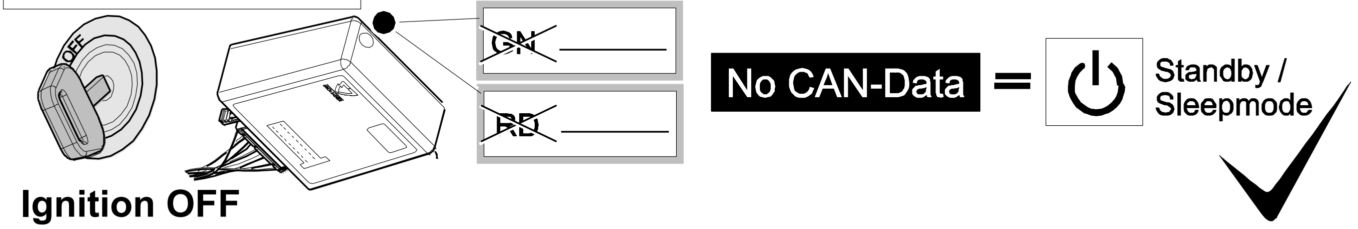
~~GN~~
~~RD~~
No CAN-Data
=
Standby /
Sleepmode

Ignition OFF

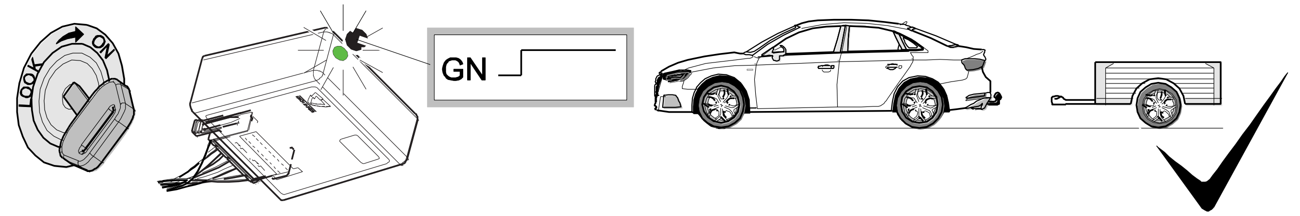

Ignition ON

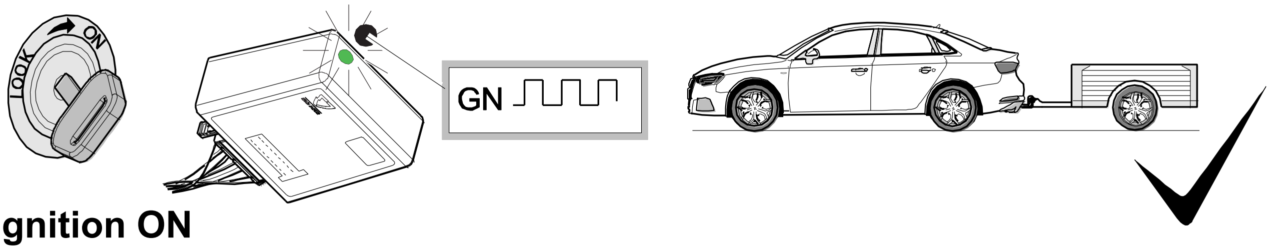

Ignition ON

Failure Support

CAN-Data Wire

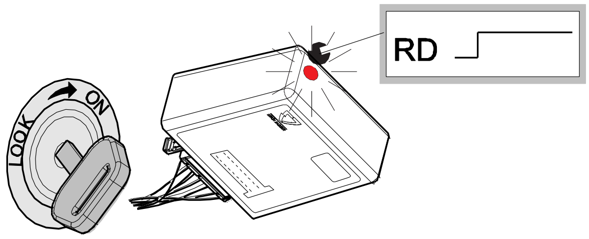

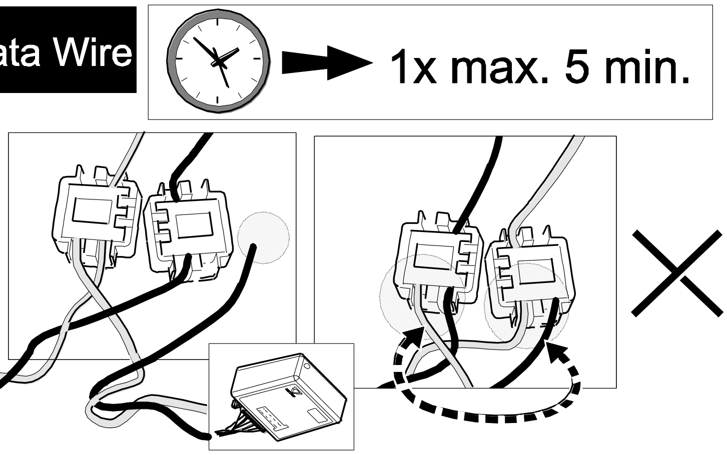

Ignition ON

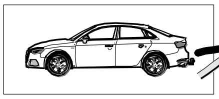

Failure indicated by the module LED glowing red for a maximum of 5 minutes. If trailer connected the tail lights will also glow indicating failure of CAN signal.

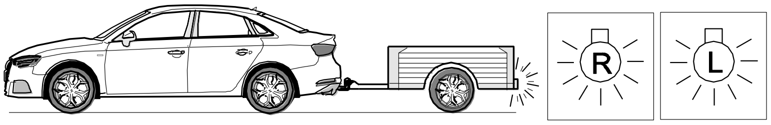

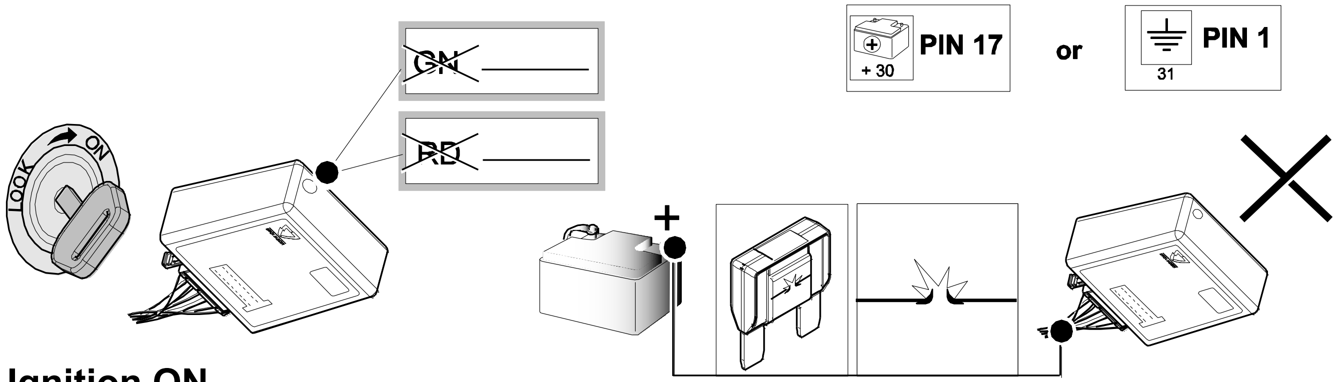
~~GN~~
~~RD~~
+ 30
PIN 17
or
31
PIN 1
ON
LOOK
+

Ignition ON

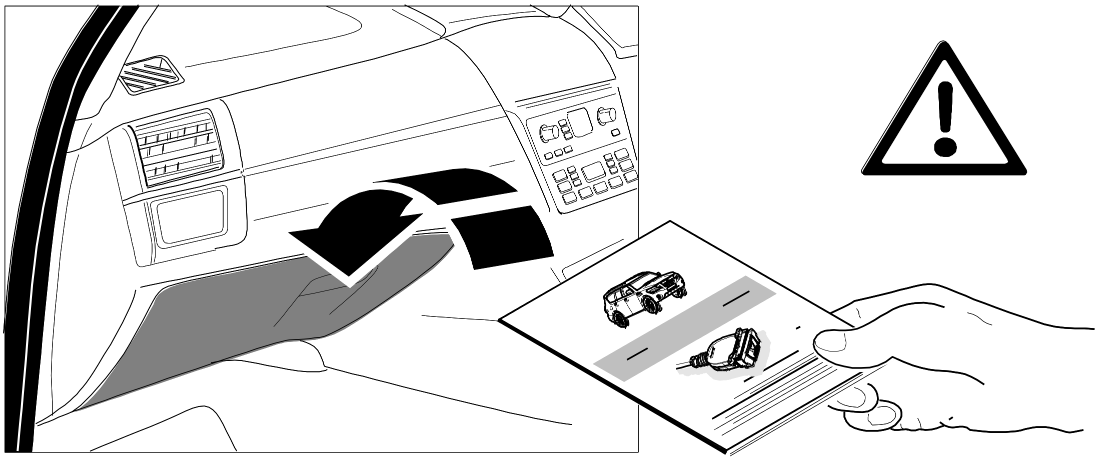

GB

Subject to change in terms of construction, equipment and colour, and may contain errors.
The information and illustrations are non-binding.

Scan this for our full E-Kit catalogue