Towbar Fitting Instructions
To Suit KIA CERATO YD CL2
Part Number KM22L
Rating 1200 / 75 kg

PLACE THESE INSTRUCTIONS IN THE VEHICLE'S GLOVEBOX AFTER INSTALLATION IS COMPLETED

WARNING:

1. Do not, drill, cut, weld or otherwise modify the tow bar.
2. If you are using electric welding on a motor vehicle, **always** check that the vehicle is not equipped with electronic engine or instrument management equipment. Failure to do so could **destroy** any onboard computers. If in doubt, check with the vehicle's manufacturer.
3. The high tensile fasteners supplied with this product were used to achieve the specified rating. If replacement is required ensure that fasteners of the same rating & quality are used. Contact an authorised **Trailboss** dealer if further information is required.
4. If TBM is used in inverted position tow ball may make contact with rear tailgate when lowered, which could cause damage.

General:

1. Ensure all hardware items have been included refer to assembly diagram.
2. It is recommended that the instructions are read through and completely understood before making any attempt to fit this product.
3. Be wary of any changes to vehicle designs or other accessories that may conflict with the installation of this product.
4. Before drilling ensure that the area is clear of fuel, electrical & other components.
5. All holes drilled into the body panels shall have all burrs & swarf removed then coated with a suitable rust preventative paint.
6. For vehicles that require the bumper to be cut. Ensure cut out area is in correct position on the vehicle prior to cutting the bumper.
7. The high tensile fasteners supplied with this product were used to achieve the specified rating. If replacement is required ensure that fasteners of the same rating & quality are used. Contact an authorized **Trailboss** dealer if further information is required.
8. Ensure that all hardware is fastened to torque list below check fasteners on regular basis.
9. Tow bar load rating sticker provided with this product shall be conspicuously located on inside rear end of the driver's door. **(See diagram below).**
10. Trailboss recommends that you check your tow ball to ensure that it complies with the Australian standards **AS 4177.2.**
11. **PLEASE NOTE**: It is advised to remove your LUG or TBM when not actually towing so as to produce a clear view of the vehicles registration plate if obscured, and to also provide maximum available departure angle

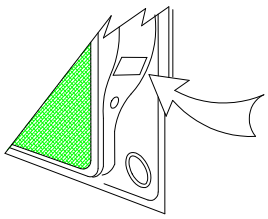

Place load rating sticker inside driver's door here

FOR TRAILER TOWING PURPOSES ONLY
For towing capacity details please refer to vehicle owner's manual or to the manufacturer. Overloading can void your warranties.

RECOMMENDED ASSEMBLY TORQUE LISTING

Diameter	Grade 8.8 Bolt
M6	9.5 Nm
M8	21.7 Nm
M10	43.4 Nm
M12	77.3Nm
M14	146 Nm
M16	189.8 Nm

Tow bar Maintenance and Care.

Trailboss recommends that bolt torque's, as listed below, are routinely and regularly inspected and checked for correct tension. Replace any worn or defective parts.
We recommended to remove Tow Ball Mounts (TBM's, tongues or lugs) when not being used for any considerable length of time.
So as to avoid injury, when not towing it is suggested that the tongue, Pull Pin and R-clip are removed then stored in a safe, clean and dry place, away from excessive moisture.
Hitch Pull Pins and spring "R" clips are regularly checked for proper installation. Replace any worn or defective parts.

Cequent Customer Service
Ph: 1800 812 017 Fax: 03 9898 3299
Email: info@cequent.com.au
Post: PO Box 4050, Dandenong South VIC 3175

Towbar Fitting Instructions
To Suit KIA CERATO YD CL2
Part Number KM22L
Rating 1200 / 75 kg

PLACE THESE INSTRUCTIONS IN THE VEHICLE'S GLOVEBOX AFTER INSTALLATION IS COMPLETED

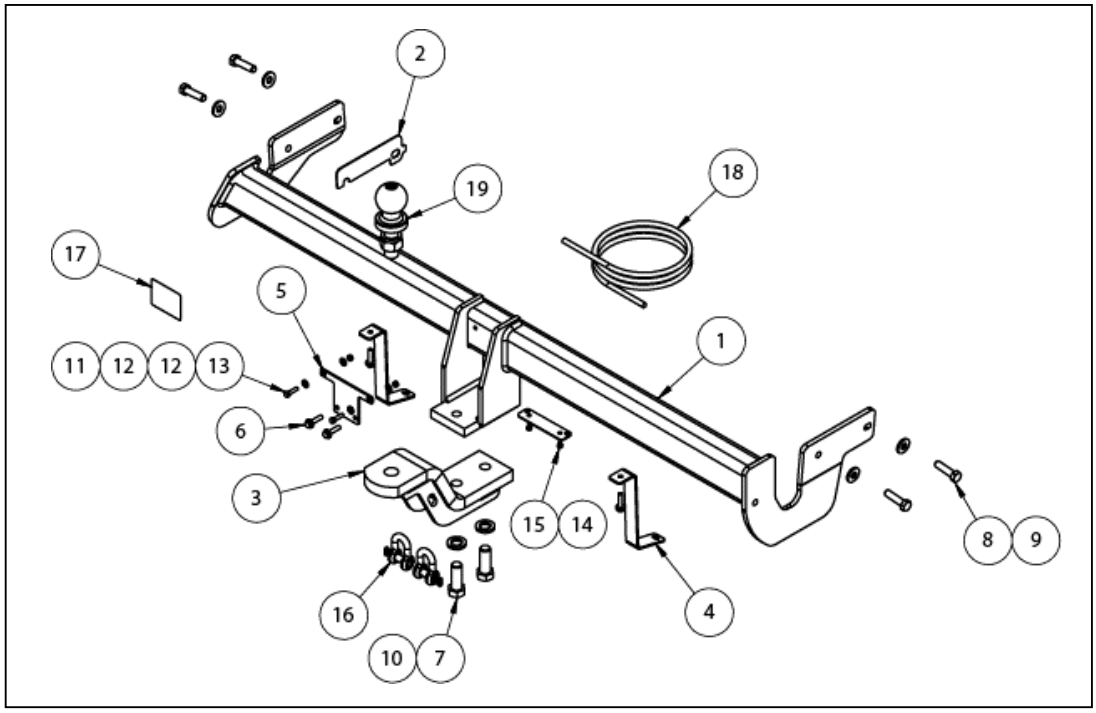

ITEM NO.	DESCRIPTION	QTY.
1	KIA CERATO YD CL2 WELDED ASSY	1
2	SPACER	1
3	LUG ASSY	1
4	BUMPER TAB	2
5	SENSOR TAB	1
6	TEK SCREW 14-20 HEX HD 22MM	4
7	BOLT M16x45 2.0P	2
8	M10x45x1.25P GR 10.9	4
9	WASHER FT M10x25.4x3	4
10	SPRING WASHER M16x5x3.5	2
11	NUT NYLOC M5-0.8 Z/P	2
12	WASHER FLAT M6x12.5x1.2	4
13	SET SCREW HEX HD M5x20x0.8P	2
14	PLUG BRACKET	1
15	NUT NYLOC M4-0.7 Z/P	2
16	"D" SHACKLE 10 MM	2
17	ACRYLIC COMPLIANCE STICKER	1
18	WIRING LOOM	1
19	TOWBALL 50MM	1

Cequent Customer Service
Ph: 1800 812 017 Fax: 03 9898 3299
Email: info@cequent.com.au
Post: PO Box 4050, Dandenong South VIC 3175

Towbar Fitting Instructions
To Suit KIA CERATO YD CL2
Part Number KM22L
Rating 1200 / 75 kg

PLACE THESE INSTRUCTIONS IN THE VEHICLE'S GLOVEBOX AFTER INSTALLATION IS COMPLETED

1. Open boot and remove 2x screws securing the taillight assembly. Remove the taillight assembly by pulling rearwards. Disconnect the wiring harness, the connector located behind the rubber grommet seal. Repeat for the opposite side.	
2. In the tail light cavity, remove 1x scrivet and 1x screw. Repeat for opposite side of vehicle.	
3. Inside wheel arch, remove 3x screws. Repeat for opposite side of vehicle.	

Cequent Customer Service
Ph: 1800 812 017 Fax: 03 9898 3299
Email: info@cequent.com.au
Post: PO Box 4050, Dandenong South VIC 3175

Towbar Fitting Instructions
To Suit KIA CERATO YD CL2
Part Number KM22L
Rating 1200 / 75 kg

PLACE THESE INSTRUCTIONS IN THE VEHICLE'S GLOVEBOX AFTER INSTALLATION IS COMPLETED

4. Remove 8x scrivets located under and along the width of the bumper.	
5. Under bumper on LH side, attached to rear panel, locate and disconnect the wiring harness plug.	
6. From underneath vehicle, remove 4x bolts (2 per side) securing bumper assembly (impact beam) to vehicle rear panel. **7.** Carefully peel away from the sides and remove bumper assembly from vehicle. Ensure any other bumper related sensor harnesses are disconnected. Ensure you have a suitable area to place the bumper assembly prior to removal.	

Cequent Customer Service
Ph: 1800 812 017 Fax: 03 9898 3299
Email: info@cequent.com.au
Post: PO Box 4050, Dandenong South VIC 3175

Towbar Fitting Instructions
To Suit KIA CERATO YD CL2
Part Number KM22L
Rating 1200 / 75 kg

PLACE THESE INSTRUCTIONS IN THE VEHICLE'S GLOVEBOX AFTER INSTALLATION IS COMPLETED

8. Drop the exhaust by releasing the LH and RH rubber mountings from the hanger brackets. The exhaust pipe can rest on the rear axle.

9. Mount towbar assembly to vehicle and secure with 4 x M10 bolts complete with 1 x washer per bolt.

Ensure the spacer plate is fitted between the LH side arm and chassis rail.

Torque all bolts to 68Nm.

10. Secure supplied bumper brackets to outermost holes on towbar crosstube using supplied self-tapping screws, to allow for bumper connection upon reassembly

11. If vehicle is mounted with a keyless entry sensor, install sensor onto supplied plate and mount the plate with self-tapping screws to central section of towbar.

CAUTION
Do not overtighten screws as they may break and render installation onto towbar difficult.

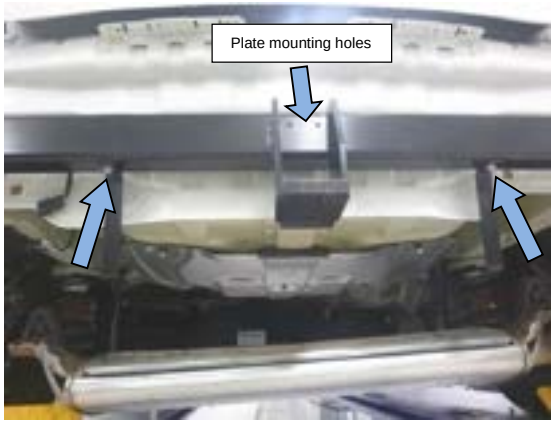

Cequent Customer Service
Ph: 1800 812 017 Fax: 03 9898 3299
Email: info@cequent.com.au
Post: PO Box 4050, Dandenong South VIC 3175

12. Refit the exhaust rubber mountings to the hanger brackets.	
13. Remove 2x scrivets securing the impact beam to the top of bumper. Release the wiring harness from the impact beam secured by 4 clips. Remove and dispose the impact beam.	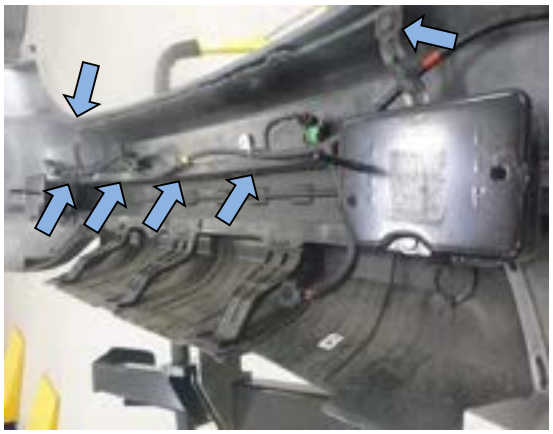
14. Work on the inside of the bumper and mark out the bumper cut as depicted. Use the bumper tab hole and the arrow emboss on the bumper as the centre reference Perform a bumper cut (135mm long x 90mm wide) as depicted. Measurements are from the bottom edge of the bumper. (The upper cut should be close to the top style line).	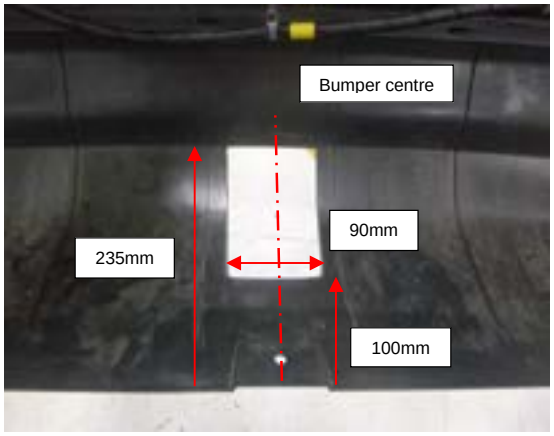

Cequent Customer Service
Ph: 1800 812 017 Fax: 03 9898 3299
Email: info@cequent.com.au
Post: PO Box 4050, Dandenong South VIC 3175

Towbar Fitting Instructions
To Suit KIA CERATO YD CL2
Part Number KM22L
Rating 1200 / 75 kg

PLACE THESE INSTRUCTIONS IN THE VEHICLE'S GLOVEBOX AFTER INSTALLATION IS COMPLETED

15. At an appropriate position on the bumper, mark out and drill 2x ø5mm holes 69mm apart on bumper skin to support plug bracket. (There is enough clearance for this step to be conducted after bumper fitment to optimize the fitment position.)	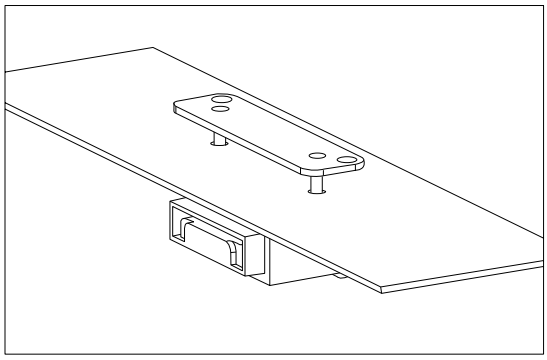

Cequent Customer Service
Ph: 1800 812 017 Fax: 03 9898 3299
Email: info@cequent.com.au
Post: PO Box 4050, Dandenong South VIC 3175

Wiring Loom Fitting Instructions
To Suit Kia YD Cerato 5DR Hatch
Part Number 100530-WL (KM22L)

Wiring Loom Installation Instructions

Kia YD Cerato 5DR Hatch
Part No: 100530-WL

Tail Harness Length Required: 1200mm
RPA Override Switch Part No: 04848 (If Fitted)

Wiring Loom Installation Time: Approx 30 Mins

Issue Date 07-10-16

Cequent Customer Service
Ph: 1800 812 017 Fax: 03 9797 3299
Email: info@cequent.com.au
Post: PO Box 4050, Dandenong South VIC 3175

Wiring Loom Fitting Instructions
To Suit Kia YD Cerato 5DR Hatch
Part Number 100530-WL (KM22L)

1. In the luggage compartment remove the rear sunshade and fold the rear seats forward.
2. Remove the floor cover carpet.
3. Remove the three storage covers.
4. Remove the centre storage tray.
5. Remove the two outer storage trays by first removing the screws.
6. Remove the rear trim by first removing the two clips.
7. On the LHS side trim, remove the floor screw.
8. Remove the two clips.
9. Remove the bolts located underneath the two upper caps.
10. Remove the LHS side trim.
11. Repeat Steps 7-10 for the RHS.
12. Locate and remove the vehicle grommet in the LHS rear quarter corner. Drill out the hole to Ø30mm hole.
13. File any rough or sharp edges and spray on rust inhibitor.
14. Locate and disconnect the LHS tail light connectors.
15. Patch in the Trailer Harness mating connectors.
16. In the upper LHS of the luggage compartment, locate the white vehicle connector (1).

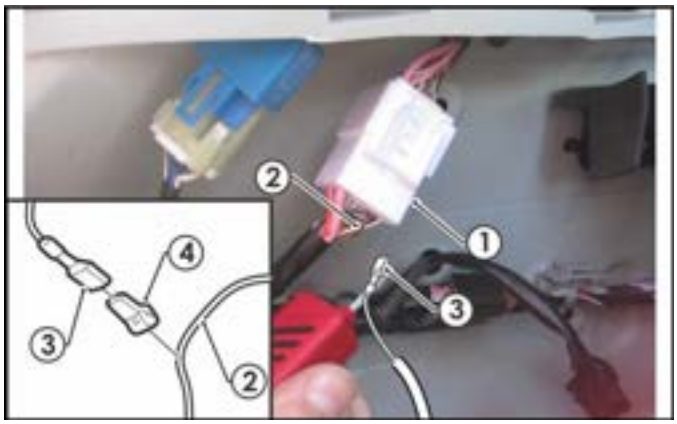

Cequent Customer Service
Ph: 1800 812 017 Fax: 03 9797 3299
Email: info@cequent.com.au
Post: PO Box 4050, Dandenong South VIC 3175

17. Following the table below, connect the ezy-tap (4) to the vehicle harness reverse wire (2) and then connect the trailer harness terminal (3) to the corresponding wire (2).

For YD model vehicles:

Function	Trailer Patch	Vehicle Connector
REVERSE	BLACK	GREY / BLACK

18. Route the Trailer Harness (P/No: 100530-WL) across the rear of the luggage compartment and towards the RHS tail light connectors.

19. Locate and disconnect the RHS tail light connectors.

20. Patch in the Trailer Harness mating connectors.

21. From outside the vehicle, mount the trailer socket to the towbar mounting bracket using M4 fasteners (not supplied).

22. Route the Tail Harness (tail length 1200mm) across the towbar towards the LHS of the vehicle and up through the previously drilled out hole.

23. Ensure the Tail Harness grommet is seated correctly and secure in place using a cable tie (not supplied).

24. Connect the Tail Harness 8-way connector to the Trailer Harness mating 8-way connector.

25. Test the Trailer Harness function using a Light Board or multi-meter.

26. Secure all Harnesses using cables ties (not supplied).

27. Re-fit all removed parts and secure all fasteners, ensuring there are no squeaks or rattles.

28. Place the instructions in the glove box after fitment.

29. The RPA function can be disabled via a switch next to the gear shift.

Cequent Customer Service
Ph: 1800 812 017 Fax: 03 9797 3299
Email: info@cequent.com.au
Post: PO Box 4050, Dandenong South VIC 3175