Towbar Fitting Instructions
To Suit SSANYONG ACTYON 2012-on
Part Number QTSY303L
Rating 2300/230 kg

WARNING:

1. Do not, drill, cut, weld or otherwise modify the tow bar.
2. If you are using electric welding on a motor vehicle, **always** check that the vehicle is not equipped with electronic engine or instrument management equipment. Failure to do so could **destroy** any onboard computers. If in doubt, check with the vehicle's manufacturer.
3. The high tensile fasteners supplied with this product were used to achieve the specified rating. If replacement is required ensure that fasteners of the same rating & quality are used. Contact an authorised **Trailboss** dealer if further information is required.

General:

1. Ensure all hardware items have been included refer to assembly diagram.
2. It is recommended that the instructions are read through and completely understood before making any attempt to fit this product.
3. Be wary of any changes to vehicle designs or other accessories that may conflict with the installation of this product.
4. Before drilling ensure that the area is clear of fuel, electrical & other components.
5. All holes drilled into the body panels shall have all burrs & swarf removed then coated with a suitable rust preventative paint.
6. For vehicles that require the bumper to be cut. Ensure cut out area is in correct position on the vehicle prior to cutting the bumper.
7. The high tensile fasteners supplied with this product were used to achieve the specified rating. If replacement is required ensure that fasteners of the same rating & quality are used. Contact an authorized **Trailboss** dealer if further information is required.
8. Ensure that all hardware is fastened to torque list below check fasteners on regular basis.
9. Tow bar load rating sticker provided with this product shall be conspicuously located on inside rear end of the driver's door. **(See diagram below).**
10. Trailboss recommends that you check your tow ball to ensure that it complies with the Australian standards **AS 4177.2.**
11. **PLEASE NOTE**: It is advised to remove your lug or tbm when not actually towing so as to produce a clear view of the vehicles registration plate if obscured, and to also provide maximum available departure angle
12. Pull Pin must be fit in down position.

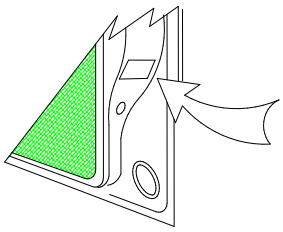

Place load rating sticker inside driver's door here

FOR TRAILER TOWING PURPOSES ONLY
For towing capacity details please refer to vehicle owner's manual or to the manufacturer. Overloading can void your warranties.

RECOMMENDED ASSEMBLY TORQUE LISTING

Diameter	Grade 8.8 Bolt
M6	9.5 Nm
M8	21.7 Nm
M10	43.4 Nm
M12	77.3Nm
M14	146 Nm
M16	189.8 Nm

Tow bar Maintenance and Care.

Trailboss recommends that bolt torque's, as listed below, are routinely and regularly inspected and checked for correct tension. Replace any worn or defective parts.
We recommended to remove Tow Ball Mounts (TBM's, tongues or lugs) when not being used for any considerable length of time.
So as to avoid injury, when not towing it is suggested that the tongue, Pull Pin and R-clip are removed then stored in a safe, clean and dry place, away from excessive moisture.
Hitch Pull Pins and spring "R" clips are regularly checked for proper installation. Replace any worn or defective parts.

Cequent Customer Service
Ph: 1800 812 017 Fax: 03 9898 3299
Email: info@cequent.com.au
Post: PO Box 4050, Dandenong South VIC 3175

Part No.
QTSY303L

ACTYON
2012 Production Onwards
Towbar
Installation Instructions

Place these instructions in vehicle's glovebox after installation is complete

Parts List Important: Check kit contents before commencing fit.

Item	Component Name	Qty	
1	TOWBAR	1	
2	TBM	1	
3	WASHER PLATE	3	
4	BUMPER TRIM	1	
5	M10x25x1.5 BOLT	1	
6	M10x1.5 NUT	1	
7	M10x45x1.5 BOLT	6	
8	M10 WASHER	6	
9	M10x1.5 TAPPED PLATE	2	
10	SPRING COTTER PIN	1	
11	PULL PIN	1	
12	COLLAR COVER	1	

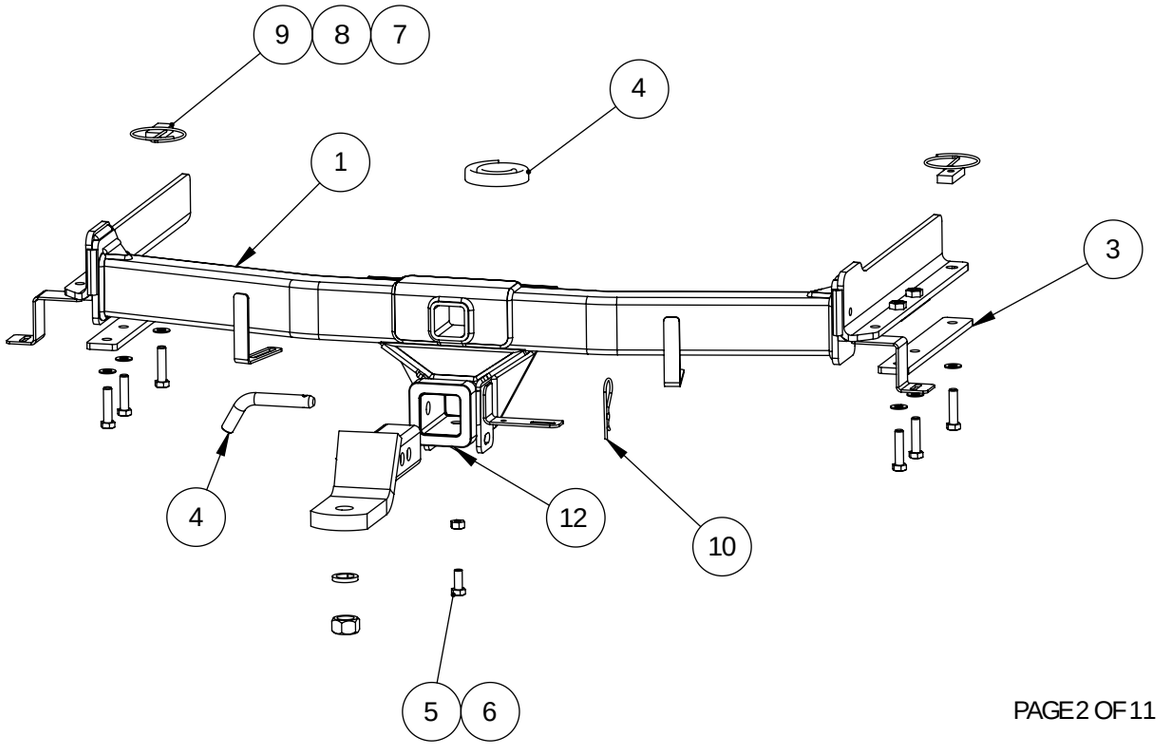

Actyon
Part No. QTSY303L

TOWING LUG POSITION

FOR STANDARD BODY

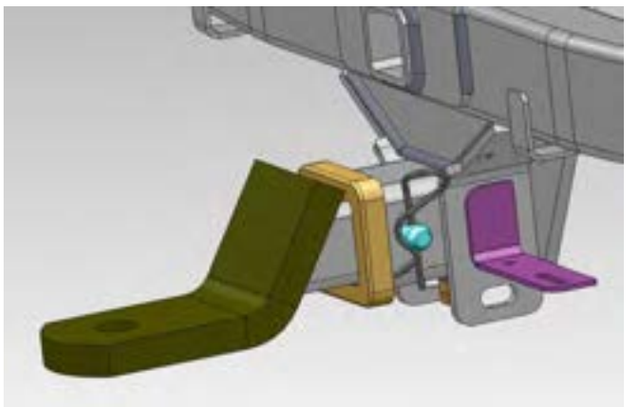

FOR TRAY BODY

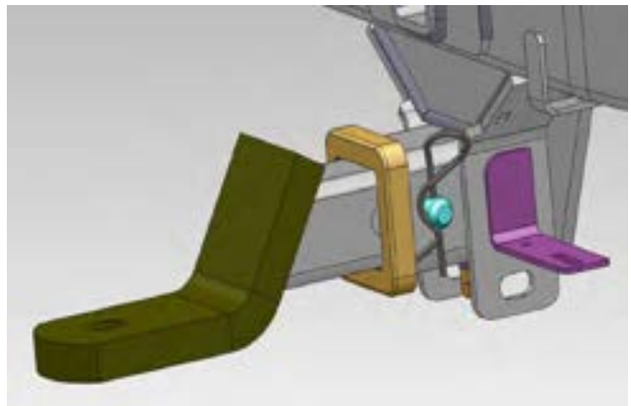

Step 1: Tail light removal.

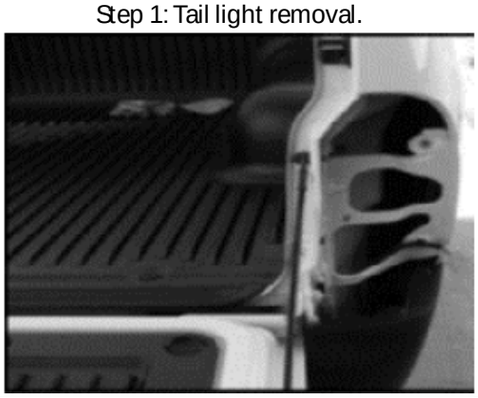

1. Remove both tail lights, by lowering the tail gate and removing 2 screws each side ensure the wirning connectors are disconnected.

NOTE: Skip this step if your vehicle has a tray body

Step 2: Rear bumper and impact beam removal

2. Remove both the rear bumper and rear impact beam using step below. Retain all fasteners

NOTE: Skip this step if your vehicle has a tray body

2a. Disconnect reverse parking sensors (if fitted).
2b. Remove 4 scrivets and 2 screws under where the tail light were located.
2c. Remove 8 x screws (4 per side) inside the wheel arch.
2d. Remove 4 m8 bolts securing the impact beam to the chassis.
2e. Remove the rear bumper and rear impact beam.

3. Remove exhaust from the rear most rubber hanger.

Step 3: Exhaust removal

Step 4: Towbar □tment

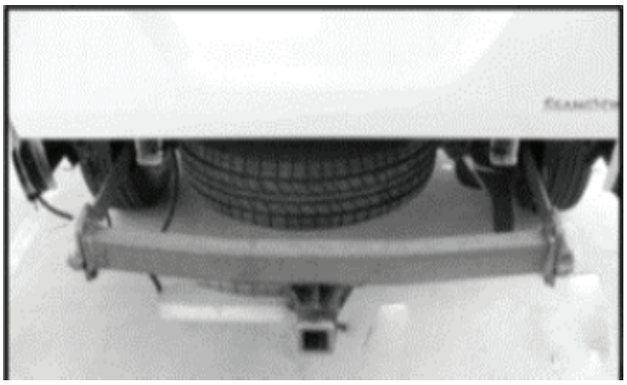

4. O□er the towbar to the vehicle, siding the side arms into the chassis rail.

If required reposition the spare tyre as far forward as posible.

Figure 5: Towbar attachment

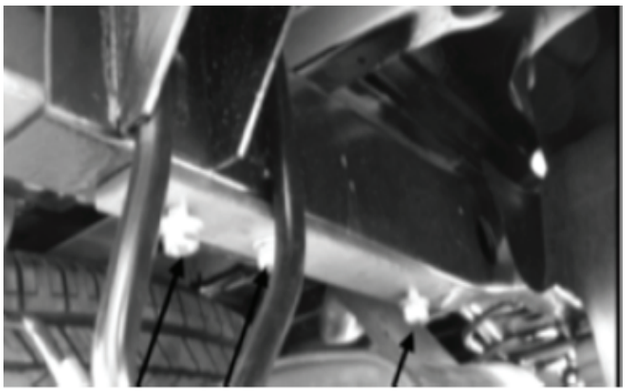

5. Attach the towbar to the chassis with the washer plate on the lower side of the chassis rail, using an M10 x 45 bolt and □at washer for the rear two most bolt holes, and M10 x 45 bolt, M10 □at washer and nut plate on a wire.

6. Torque the 6 towbar attachment bolts to 44Nm.

7. Remove the rear bumper facia from the rear impact beam by removing the scrivets along the top edge of the bumper. Discard rear impact beam.

NOTE: Skip this step if your vehicle has a tray body

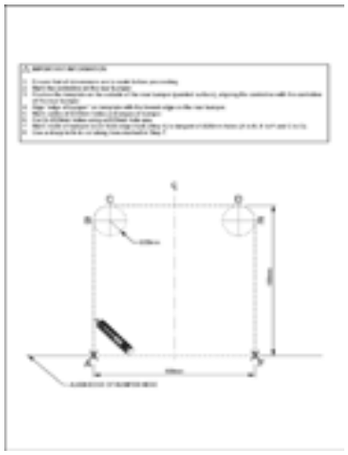

Figure 1: bumper cutout

8. Cut the rear bumper using the template provided. Refer to Figure 1.

Fit Bumper Trim over the bumper cut and trim overhang with scissors.

NOTE: Skip this step if your vehicle has a tray body

9. Re□t the rear bumper, exhaust to its hanger and tail lights by reversing the steps eariler in these instructions.

Note: if rear parking sensors are □tted to your vehicle you will need to route the wiring through and locate the senosr in the cut out in the towbar cross member.

NOTE: Skip this step if your vehicle has a tray body

10. A□x the towbar rating label to the inside of the right hand front door jam.

11. Apply □rm pressure to secure the Plastic Hitchbox Collar Cover (Item 6) to the Hitchbox.

12. Insert the Tongue into the Towbarand secure with Pull Pin and R-Clip.

Attach the Towball Assembly to the Tongue.

IMPORTANT INFORMATION

- The Towbar is to be used solely for the purpose of towing. Other uses may damage Towbar and/or vehicle.

- The Tongue is attached before towing using the pull pin and R -Clip. These items along with the Tongue are removed after towing.

- When not towing ensure the Tongue is securely stored in a closed compartment within the vehicle. Injury may occur if the tongue moves about within the vehicle.

IMPORTANT INFORMATION

1. Ensure that all dimensions are to scale before proceeding.
2. Mark the centreline on the rear bumper.
3. Position the template on the outside of the rear bumper (painted surface), aligning the centreline with the centreline of the rear bumper.
4. Align "edge of bumper" on template with the lowest edge on the rear bumper.
5. Mark centre of Ø20mm holes and edges of bumper.
6. Cut 2x Ø20mm holes using a Ø20mm hole saw.
7. Mark inside of bumper cover from edge of bumper to tangent of Ø20mm holes (A to B, E to F and C to D).
8. Use a sharp knife to cut along lines marked.

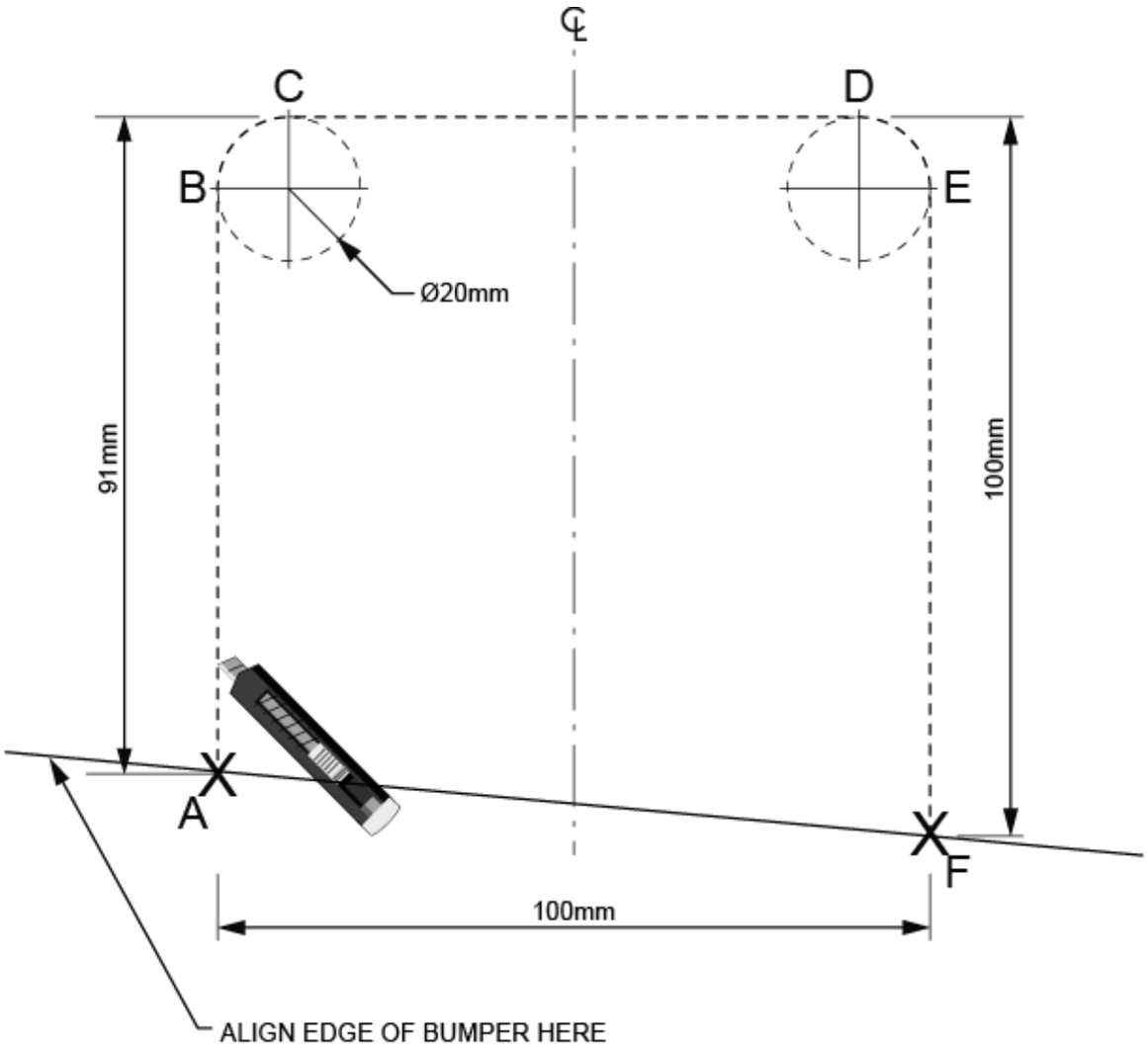

Wiring Loom Installation Instructions

Ssangyong Q100 Actyon Sports Ute
Part No: 100508-WL

Tail Length Required: 1200mm

RPA Override Switch Part No: 04848 (If Fitted)

Wiring Loom Installation Time: Approx 30 Mins

Cequent Customer Service
Ph: 1800 812 017 Fax: 03 9797 3299
Email: info@cequent.com.au
Post: PO Box 4050, Dandenong South VIC 3175

TRAILBOSS

PART No: 100508-WL
SSANGYONG Q100 ACTYON SPORTS UTE
INSTALLATION INSTRUCTIONS

PLEASE ENSURE THAT INSTRUCTIONS ARE UNDERSTOOD PRIOR TO FITMENT

1. From outside the vehicle, lower the rear tailgate (1).	
2. Remove LHS tail light by first removing the two fasteners (1). 3. Repeat for the RHS.	
4. Disconnect the LHS tail light connector (1). 5. Patch in the trailer patch (P/No: 100508-WL) mating connectors.	

INSTALLATION INSTRUCTIONS

PLEASE ENSURE THAT INSTRUCTIONS ARE UNDERSTOOD PRIOR TO FITMENT

6. Route the trailer harness (1) from the LHS along the underside of the rear bumper, following the vehicle harness towards the RHS of the vehicle.	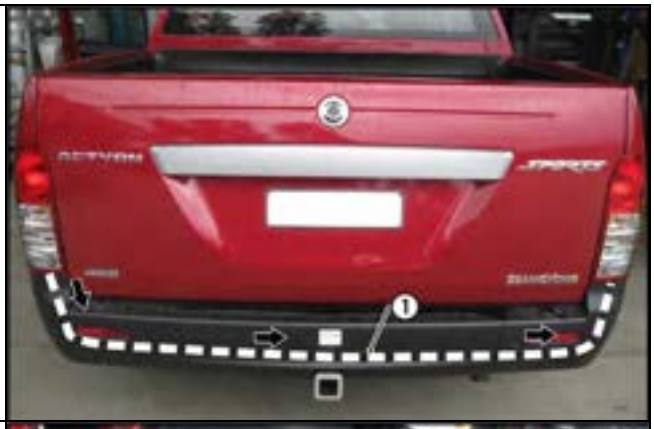
7. Disconnect the RHS tail light connector (1). 8. Patch in the trailer patch mating connectors.	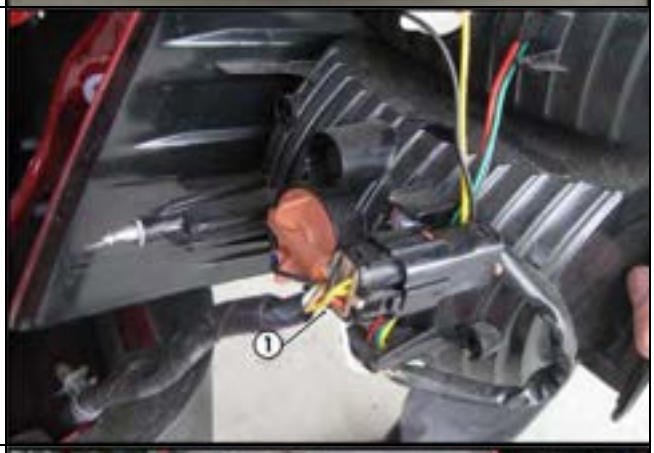
9. Mount the trailer socket to the towbar mounting bracket using M4 fasteners (not supplied). 10. Route the tail harness across the towbar towards the LHS of the vehicle.	

INSTALLATION INSTRUCTIONS

PLEASE ENSURE THAT INSTRUCTIONS ARE UNDERSTOOD PRIOR TO FITMENT

11. Connect the tail harness (tail length 1200mm) 8-way connector (1) to the trailer harness mating 8-way connector (2).	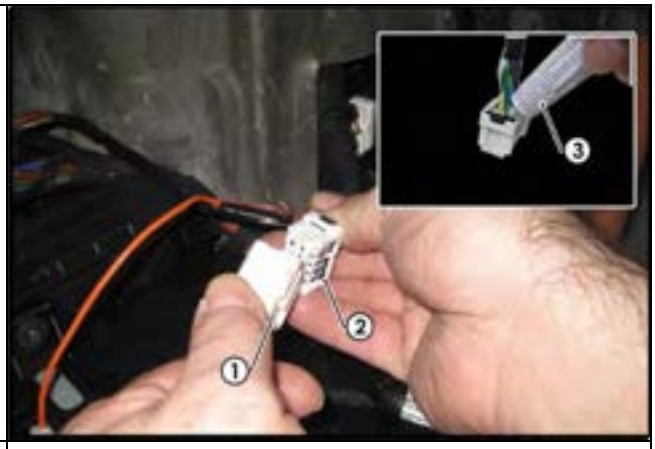
12. Test the trailer harness function using a light board or multimeter. 13. Secure all harnesses using cables ties (not supplied). 14. Re-fit all removed parts and secure all fasteners, ensuring there are no squeaks or rattles. 15. Place the instructions in the glove box after fitment.	